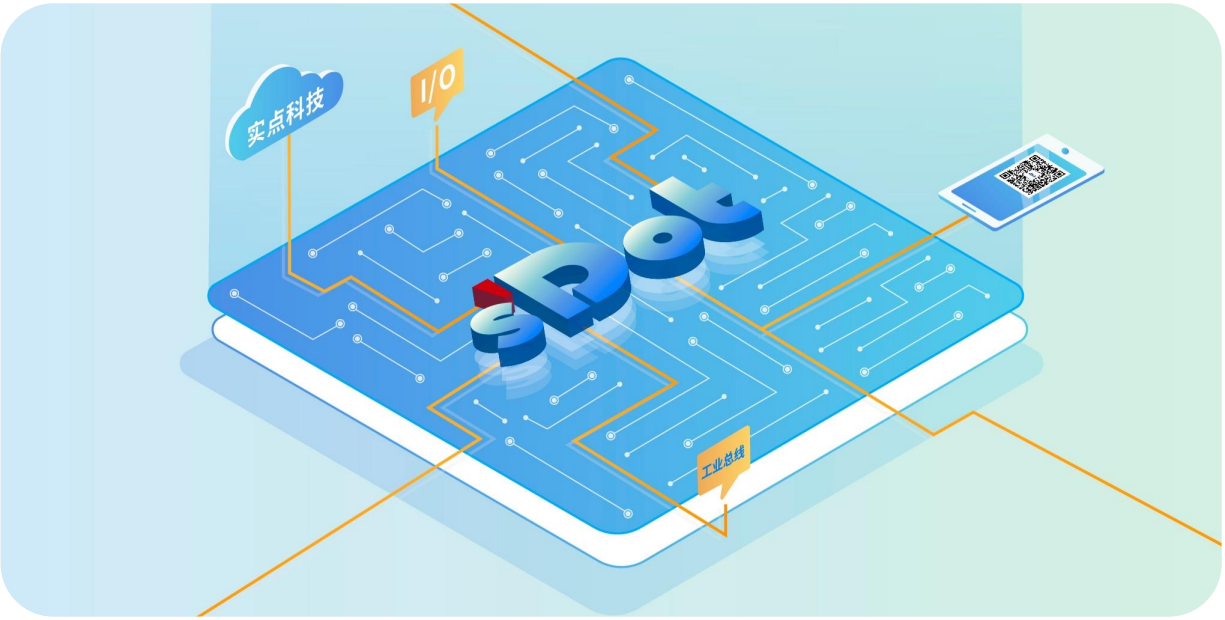

Modbus TCP

XB6S Series Slice I/O

User Manual

Nanjing Solidot Electronic Technology Co., Ltd.

Copyright © 2024-2025 Nanjing Solidot Electronic Technology Co., Ltd. All rights reserved..
Without the written permission of this company, no organization or individual may excerpt or reproduce any part or all of the contents of this document, nor may they disseminate it in any form.

Trademark Declaration

All other Solidot trademarks are trademarks of Nanjing Solidot Electronic Technology Co., Ltd.

All other trademarks or registered trademarks mentioned in this document are the property of their respective owners.

Notice

Your purchase of products, services, or features is subject to the terms and conditions of the Solidot Company's commercial contracts. All or part of the products, services, or features described in this document may not be included in your purchase or use. Unless otherwise agreed in the contract, Solidot Company makes no express or implied representations or warranties regarding the contents of this document.

This document will be updated periodically due to product version upgrades or other reasons. Unless otherwise agreed, this document is for guidance only, and all statements, information, and suggestions in this document do not constitute any express or implied warranty.

Nanjing Solidot Electronic Technology Co., Ltd.
Address: 11th Floor, Angying Building, No. 91 Shengli Road, Jiangning District, Nanjing City, Jiangsu Province
Postal code: 211106
Telephone: 4007788929
Website:http://www.solidotech.com

Table of contents

1 Product Overview 1

1.1 Product Introduction 1

1.2 Product Features 1

1.3 Application methods 2

2 Naming Rules 5

2.1 Naming Rules 5

2.1.1 Coupler naming rules 5

2.1.2 I/O module naming rules 6

2.2 Module list 8

3 Module Introduction 10

3.1 Modbus TCP Coupler 10

3.1.1 Panel structure 10

3.1.2 Rotary switch 11

3.1.3 Indicator function 13

3.1.4 Product Parameters 14

3.1.4.1 Interface parameters 14

3.1.4.2 Power parameters 14

3.1.4.3 General parameters 14

3.1.5 Power wiring diagram 16

3.1.6 Bus wiring 16

3.1.7 Outline Dimensions 17

3.2 Digital I/O modules 18

3.2.1 Panel structure 18

3.2.2 Indicator function 18

3.2.3 Technical parameters 19

3.2.3.1 Digital input module parameters 19

3.2.3.2 Digital Input/Output Module Parameters 20

3.2.3.3 Digital output module parameters 22

3.2.3.4 Relay output module parameters 24

3.2.3.5 General technical parameters 24

3.2.4 Wiring diagram 21

3.2.4.1 XB6S-3200 21
3.2.4.2 XB6S-1600 22
3.2.4.3 XB6S-0800 23
3.2.4.4 XB6S-1616A 24
3.2.4.5 XB6S-1616B 31
3.2.4.6 XB6S-0032A 32
3.2.4.7 XB6S-0032B 33
3.2.4.8 XB6S-0016A 34
3.2.4.9 XB6S-0016B 35
3.2.4.10 XB6S-0008A 36
3.2.4.11 XB6S-0008B 37
3.2.4.12 XB6S-3200N 38
3.2.4.13 XB6S-0032AN 39
3.2.4.14 XB6S-0032BN 40
3.2.4.15 XB6S-0012J/6 41
3.2.5 Outline Dimensions 42
3.3 Analog I/O module 44
3.3.1 Panel structure 44
3.3.2 Indicator function 44
3.3.3 Technical parameters 46
3.3.3.1 Analog input module parameters 46
3.3.3.2 Analog output module parameters 52
3.3.3.3 Analog current & voltage compatible input module parameters 54
3.3.3.4 Analog current & voltage compatible output module parameters 55
3.3.3.5 General technical parameters 56
3.3.4 Analog voltage module parameters 57
3.3.4.1 Voltage Input Module Range Selection Table 57
3.3.4.2 Voltage Output Module Range Selection Table 57
3.3.4.3 Voltage Input Module Code Value Table 58
3.3.4.4 Voltage output module code value table 61
3.3.5 Analog current module parameters 63
3.3.5.1 Current input module range selection table 63
3.3.5.2 Current output module range selection table 63
3.3.5.3 Current Input Module Code Value Table 64
3.3.5.4 Current output module code value table 66
3.3.6 Analog Current & Voltage Compatible Module Parameters 67
3.3.6.1 Current & Voltage Compatible Input Module Range Selection Table 67
3.3.6.2 Current & Voltage Compatible Output Module Range Selection Table 67
3.3.6.3 Current & Voltage Compatible Input Module Code Value Table 68

3.3.6.4 Current & Voltage Compatible Output Module Code Value Table 72
3.3.7 Wiring diagram 75
3.3.7.1 XB6S-A80VD 75
3.3.7.2 XB6S-A80V 76
3.3.7.3 XB6S-A40VD 77
3.3.7.4 XB6S-A40V 78
3.3.7.5 XB6S-A80ID 79
3.3.7.6 XB6S-A80I 80
3.3.7.7 XB6S-A40ID 81
3.3.7.8 XB6S-A40I 82
3.3.7.9 XB6S-A80 83
3.3.7.10 XB6S-A40 84
3.3.7.11 XB6S-A08V 85
3.3.7.12 XB6S-A04V 86
3.3.7.13 XB6S-A08I 87
3.3.7.14 XB6S-A04I 88
3.3.7.15 XB6S-A08 89
3.3.7.16 XB6S-A04 90
3.3.8 Outline Dimensions 91
3.4 Extended power module 93
3.4.1 Panel structure 93
3.4.2 Indicator function 93
3.4.3 Technical parameters 94
3.4.4 Wiring diagram 95
3.4.5 Outline Dimensions 96
3.5 Public End Extension Module 97
3.5.1 Technical parameters 97
3.5.2 Wiring diagram 98
3.5.3 Outline Dimensions 99
3.6 Terminal cover 100
3.6.1 Outline Dimensions 100
4 Installation and removal 101
4.1 Installation Guide 101
4.2 Installation and disassembly steps 104
4.3 Installation and disassembly diagram 105
5 Wiring 112

5.1 Terminal blocks 112
5.2 Wiring instructions and requirements 112
5.3 MIL Connector Type Module Wiring Instructions 116
5.3.1 Compatible Product List 116
5.3.2 Terminal block naming rules 116
5.3.3 Cable naming rules 117
5.3.4 Terminal block parameters 117
5.3.5 Cable parameters 117
5.3.6 Configuration rules 119
6 Use 121
6.1 IP settings and modifications 121
6.1.1 Set the IP address using the rotary switch. 121
6.1.2 Setting IP address via web 122
6.2 Factory reset 123
6.3 Parameter Description 124
6.3.1 Digital input filtering 124
6.3.2 Clear/Hold digital output signal 125
6.3.3 Analog range settings 125
6.3.4 Analog input filtering 125
6.3.5 Analog output signal clear/hold 126
6.3.6 Analog signal power-off retention 126
6.3.7 Coupler parameters 127
6.3.7.1 IO communication exception configuration function 127
6.4 Fault code information 128
6.4.1 Coupler general fault codes 128
6.4.2 Fault Code Viewing 130
6.5 Module function code mapping table 130
6.6 Modbus TCP coupler configuration application 132
6.6.1 Web applications 132
6.6.2 Application in CODESYS V3.5 software environment 145

1 Product Overview

1.1 Product Introduction

The XB6S series slice I/O modules employ a combination of couplers and I/O modules. The coupler connects the expandable I/O modules to a real-time industrial Ethernet system. The backplane uses an X-bus bus, and the coupler module handles fieldbus communication, thus enabling various I/O modules to exchange data with the coupler/controller in real time.

The XB6S series of slice I/O modules offers a wide variety and high real-time performance, providing users with support for high-speed data acquisition, optimized system configuration, simplified field wiring, and improved system reliability.

1.2 Product Features

- **Small number of nodes required**
  A node consists of a bus coupler, 1 to 32 XB6S series I/O modules, 1 to 32 XBF series expansion I/O modules, and a terminal cover.
- **Rich functionality**
  It supports flexible expansion and has a complete range of I/O types; it can integrate various digital modules, analog modules, analog current & voltage compatible modules, and temperature modules to meet the needs of different applications.
- **Flexible configuration**
  Various types of slice I/O modules can be combined arbitrarily.
- **High compatibility**
  The coupler communication interface conforms to communication standards and supports mainstream Modbus TCP master stations.
- **Small size**
  It has a compact structure and occupies little space.
- **Easy to diagnose**
  The Indicators are complete, making the module status clear at a glance and facilitating testing and maintenance.
- **Fast**

 Copyright © 2024-2025 Nanjing Solidot Electronic Technology Co., Ltd.

The backplane uses the X-bus bus: the minimum scan cycle is 200us, and the typical value is 1ms.

- **Easy to install**
  Mounted on DIN 35 mm standard rails.
  It adopts spring-loaded terminal blocks, making wiring convenient and quick.

1.3 Application methods

The coupler module connects to the controller at the application site, while the I/O module connects to the input and output sensors at the application site. The typical data acquisition, processing, and control flow is as follows:

a. The input I/O module collects various field signals and sends them to the coupler via the internal bus;
b. The controller reads and processes data from the coupler via fieldbus or industrial Ethernet, and then writes the output data back to the coupler.
c. The coupler then writes the output data to the output I/O module via the internal bus, thereby enabling device control.

Expandable I/O modules include digital input modules, digital output modules, digital input/output modules, analog input modules, analog output modules, temperature modules, etc.

Application method: Applications employ a combination of modules such as couplers, digital signals, analog signals, temperature sensors, and extended power supplies.

Application configuration: Depending on the requirements of the main station's access capabilities, number of stations, number of I/O points, and function types, it can adapt to different models of I/O module combinations and configurations.

Configuration rules: The modules, from left to right, consist of a coupler module, a power module, an I/O module, and a terminal cover (which must be configured).

The product uses a combination of coupler, I/O module, and terminal cover, and there are two possible combinations.

Product combination option 1 (coupler module, I/O module, terminal cover)

 Copyright © 2024-2025 Nanjing Solidot Electronic Technology Co., Ltd.

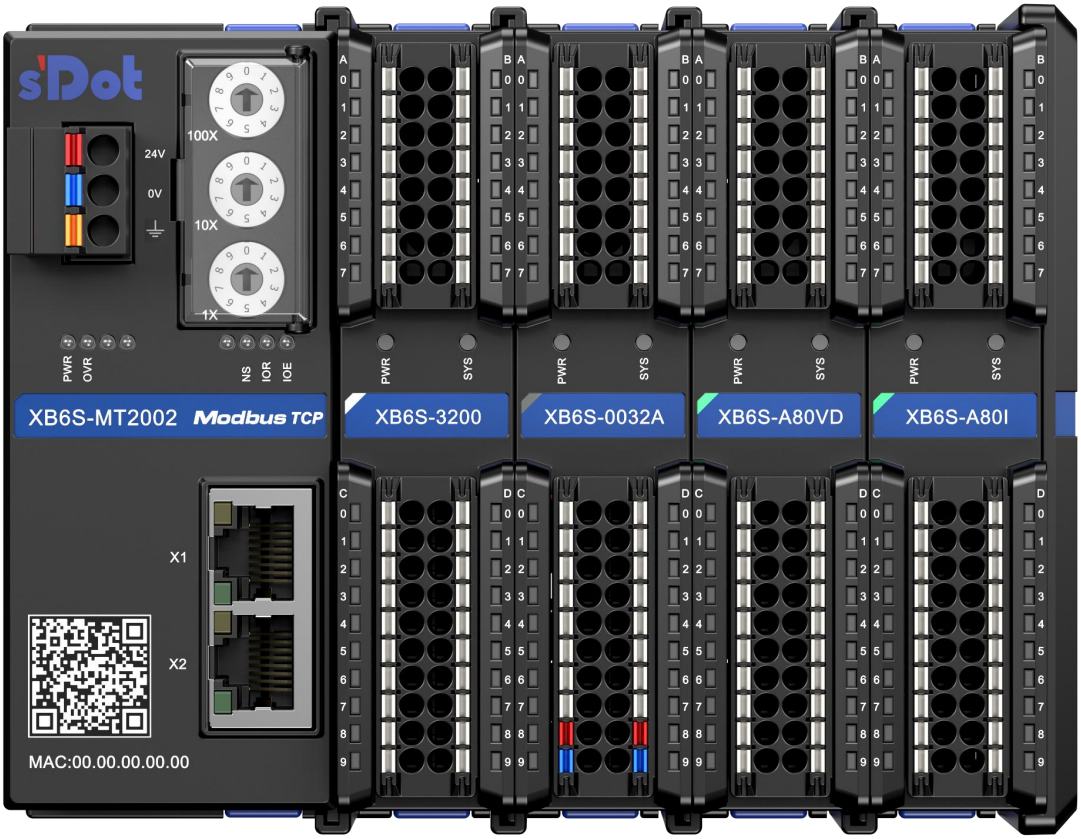

Copyright © 2024-2025 Nanjing Solidot Electronic Technology Co., Ltd.

Product combination option two (coupler module, I/O module, extended power supply module, I/O module, terminal cover)

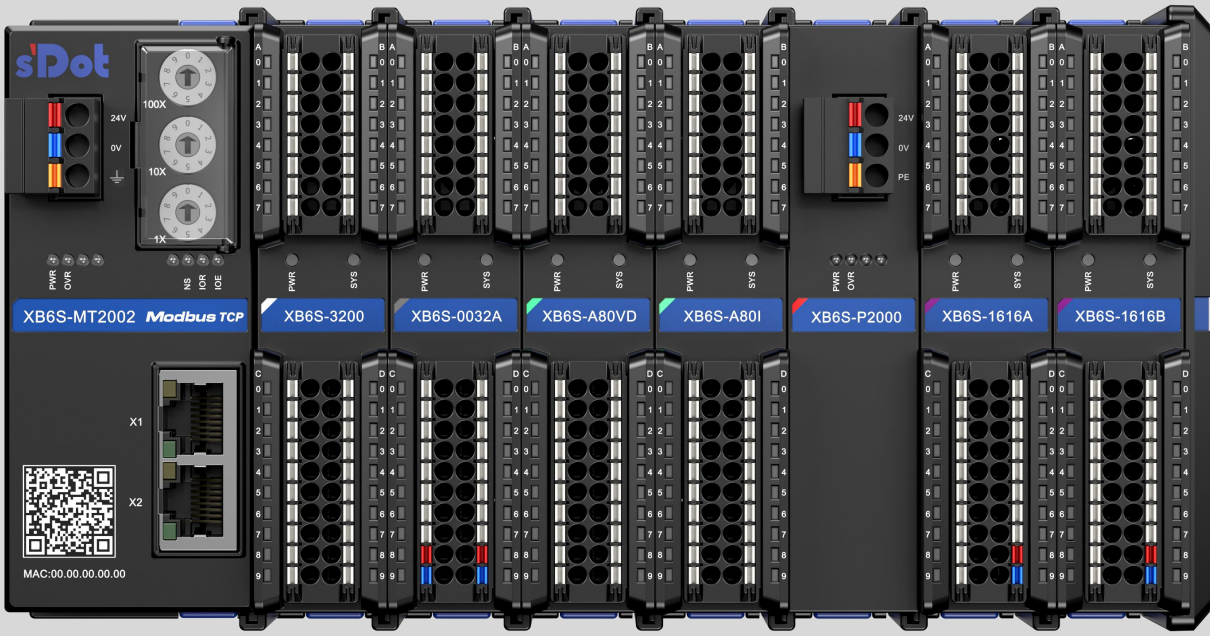

 Copyright © 2024-2025 Nanjing Solidot Electronic Technology Co., Ltd.

2 Naming Rules

2.1 Naming Rules

2.1.1 Coupler naming rules

XB 6 S - MT 20 02

(1) (2)(3) (4) (5) (6)

serial number	Meaning	Value description
(1)	Bus type	XB: X-bus
(2)	Product Series	6: Insert type
(3)	Product Version	S: Strengthen, upgraded version
(4)	Protocol	EC: EtherCAT PN: PROFINET EI: EtherNet/IP MT: Modbus TCP CB: CC-Link IE Field Basic
(5)	Power supply	20:2A
(6)	Number of network ports	02: Dual network ports

Copyright © 2024-2025 Nanjing Solidot Electronic Technology Co., Ltd.

2.1.2 I/O module naming rules

XB 6 S - A 8 0 V

(1) (2)(3) (4) (5)(6)(7)

<table>
<tr><th>Serial Number</th><th>Meaning</th><th colspan="6">Value description</th></tr>
<tr><td>(1)</td><td>Bus type</td><td colspan="6">XB: X-bus</td></tr>
<tr><td>(2)</td><td>Product Series</td><td colspan="6">6: Insert type</td></tr>
<tr><td>(3)</td><td>Product Version</td><td colspan="6">S: Strongthen, upgraded version</td></tr>
<tr><td>(4)</td><td>Types of I/O modules</td><td colspan="6">A: Analog
Default: Digital</td></tr>
<tr><td>(5)</td><td>Number of input signal points</td><td colspan="6">Analog : 0, 4, 8
Digital: 00, 08, 16, 32</td></tr>
<tr><td>(6)</td><td>Number of output signal points</td><td colspan="6">Analog : 0, 4, 8
Digital: 00, 08, 16, 32</td></tr>
<tr><td rowspan="9">(7)</td><td rowspan="9">Input/output characteristics</td><td colspan="4">Digital</td><td colspan="2">Analog</td></tr>
<tr><td>coding</td><td>Input</td><td>Output</td><td>Connector type</td><td>coding</td><td>illustrate</td></tr>
<tr><td>A</td><td rowspan="4">NPN/PNP compatible</td><td>NPN</td><td>/</td><td rowspan="2">V</td><td rowspan="2">Single-ended signal, adjustable range: Disable
-10V~+10V, 0V~10V
-5V~+5V, 0V~5V, 1V~5V</td></tr>
<tr><td>B</td><td>PNP</td><td>/</td></tr>
<tr><td>N</td><td>/</td><td rowspan="3">MIL connectors</td><td rowspan="3">VD</td><td rowspan="3">Differential signal, adjustable range: Disable
-10V~+10V, 0V~10V
-5V~+5V, 0V~5V, 1V~5V</td></tr>
<tr><td>AN</td><td>NPN</td></tr>
<tr><td>BN</td><td>PNP</td></tr>
<tr><td>default</td><td>NPN/PNP compatible</td><td colspan="2">/</td><td>I</td><td>Single-ended signal, adjustable range: Disable
4mA~20mA, 0mA~20mA</td></tr>
<tr><td>J</td><td>/</td><td colspan="2">relay</td><td>ID</td><td>Differential signal, adjustable range: Disable
4mA~20mA, 0mA~20mA
-20mA~+20mA</td></tr>
<tr><td colspan="2"></td><td colspan="2"></td><td colspan="2"></td><td>default</td><td>Single-ended signal,</td></tr>
</table>

Copyright © 2024-2025 Nanjing Solidot Electronic Technology Co., Ltd.

						compatible with analog current and voltage.
					TM	Temperature acquisition using RTDs, thermocouples, etc.

Copyright © 2024-2025 Nanjing Solidot Electronic Technology Co., Ltd.

2.2 Module list

Model	Product Description	
XB6S-MT2002	Modbus TCP busCoupler module	
XB6S-3200	32-channel digital input module, NPN/PNP compatible input, input filtering default 3ms	
XB6S-1600	16-channel digital input module, NPN/PNP compatible input, input filtering default 3ms	
XB6S-0800	8-channel digital input module, NPN/PNP compatible input, input filtering default 3ms	
XB6S-1616A	16-channel digital input/16-channel digital output module Input is NPN/PNP compatible, input filtering default is 3ms, output is NPN type.	
XB6S-1616B	16-channel digital input/16-channel digital output module Input is NPN/PNP compatible, input filtering default is 3ms, output is PNP type.	
XB6S-0032A	32-channel digital output module, output NPN type	
XB6S-0032B	32-channel digital output module, PNP type output	
XB6S-0016A	16-channel digital output module, output NPN type	
XB6S-0016B	16-channel digital output module, output PNP type	
XB6S-0008A	8-channel digital output module, output NPN type	
XB6S-0008B	8-channel digital output module, PNP type output	
XB6S-3200N	32-channel digital input module, NPN/PNP compatible input, input filtering default 3ms, MIL connector type.	
XB6S-0032AN	32-channel digital output module, NPN type output, MIL connector type	
XB6S-0032BN	32-channel digital output module, PNP type, MIL connector type	
XB6S-0012J/6	12-channel relay output module (Note: The "/" in the model number can be omitted, meaning XB6S-0012J/6 and XB6S-0012J6 are the same module)	
XB6S-A80VD	8-channel analog voltage input module	Differential signal, adjustable range: Disable, -10V~+10V, 0V~10V, -5V~+5V, 0V~5V, 1V~5V
XB6S-A80V	8-channel analog voltage input module	Single-ended signal, adjustable range: Disable, -10V~+10V, 0V~10V, -5V~+5V, 0V~5V, 1V~5V
XB6S-A40VD	4-channel analog voltage input module	Differential signal, adjustable range: Disable, -10V~+10V, 0V~10V, -5V~+5V, 0V~5V, 1V~5V
XB6S-A40V	4-channel analog voltage input module	Single-ended signal, adjustable range: Disable, -10V~+10V, 0V~10V, -5V~+5V, 0V~5V, 1V~5V
XB6S-A80ID	8-channel analog current input module	Differential signal, adjustable range: Disable, 4mA~20mA, 0mA~20mA, -20mA~+20mA
XB6S-A80I	8-channel analog current input module	Single-ended signal, adjustable range: Disable, 4mA~20mA, 0mA~20mA
XB6S-A40ID	4-channel analog current input module	Differential signal, adjustable range: Disable, 4mA~20mA, 0mA~20mA, -20mA~+20mA

 Copyright © 2024-2025 Nanjing Solidot Electronic Technology Co., Ltd.

XB6S-A40I	4-channel analog current input module	Single-ended signal, adjustable range: Disable, 4mA~20mA, 0mA~20mA
XB6S-A08V	8-channel analog voltage output module	Single-ended signal, adjustable range: Disable, -10V~+10V, 0V~10V, -5V~+5V, 0V~5V, 1V~5V
XB6S-A04V	4-channel analog voltage output module	Single-ended signal, adjustable range: Disable, -10V~+10V, 0V~10V, -5V~+5V, 0V~5V, 1V~5V
XB6S-A08I	8-channel analog current output module	Single-ended signal, adjustable range: Disable, 4mA~20mA, 0mA~20mA
XB6S-A04I	4-channel analog current output module	Single-ended signal, adjustable range: Disable, 4mA~20mA, 0mA~20mA
XB6S-A80	8-channel analog current & voltage compatible input module	Single-ended signal, adjustable range: Disable, 0mA~20mA, 4mA~20mA, -20mA~+20mA. -10V~+10V, 0V~10V, -5V~+5V, 0V~5V, 1V~5V
XB6S-A40	4-channel analog current & voltage compatible input module	
XB6S-A08	8-channel analog current & voltage compatible output module	Single-ended signal, adjustable range: Disable, 0mA~20mA, 4mA~20mA, -10V~+10V, 0V~10V. -5V~+5V, 0V~5V, 1V~5V
XB6S-A04	4-channel analog current & voltage compatible output module	
XB6S-A80TM	8-channel RTD/thermocouple temperature acquisition module (for module details, please refer to the module user manual on the official website).	
XB6S-A40TM	4-channel RTD/thermocouple temperature acquisition module (for module details, please refer to the module user manual on the official website).	
XB6S-PL20	2-channel single-ended incremental encoder counting module (for module details, please refer to the module user manual on the official website).	
XB6S-PL20D	2-channel differential incremental encoder counting module (for module details, please refer to the module user manual on the official website).	
XB6S-PC80	8-channel pulse counting module (for module details, please refer to the module user manual on the official website).	
XB6S-C01SP	1-channel serial communication module (see the module user manual on the official website for module details).	
XB6S-P2000	Extended power module	
XB6S-C18_2	Public End Extension Module	
XB6S-CVR00	Terminal cover	

 Copyright © 2024-2025 Nanjing Solidot Electronic Technology Co., Ltd.

3 Module Introduction

3.1 Modbus TCP Coupler

3.1.1 Panel structure

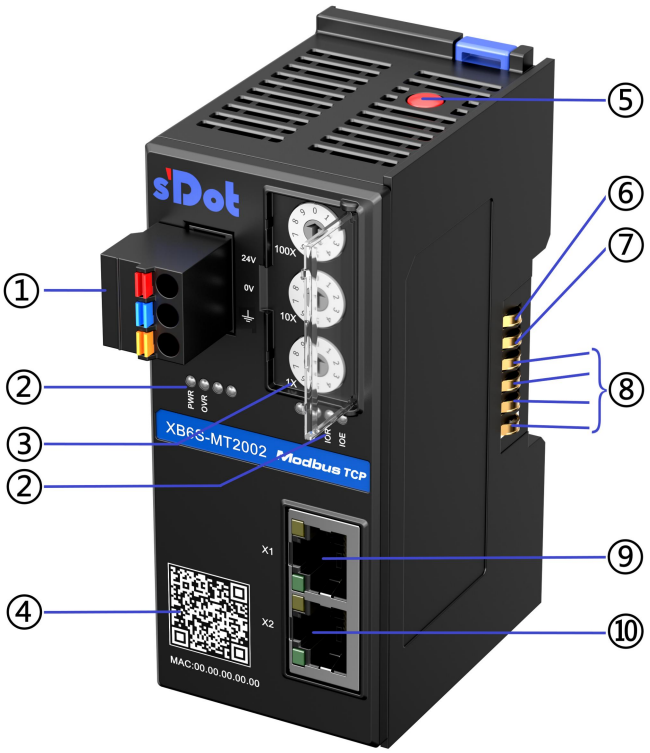

Serial Number	Name	Illustrate
①	Power terminal	3P spring-loaded terminal block
②	Module Indicators and Indicator labels	Indicates coupler power status and system operating status
③	Rotary switch	Set IP address

 Copyright © 2024-2025 Nanjing Solidot Electronic Technology Co., Ltd.

④	Module QR code	Scan the QR code to access module-related information.
⑤	Reset button	Reset IP information and configuration parameters
⑥	Power+	5V
⑦	power supply-	0V
⑧	X-bus communication signals	Communication signals
9	Bus Interface X1	RJ45 interface
⑩	Bus Interface X2	RJ45 interface

3.1.2 Rotary switch

IP address settings

A rotary switch can be used to specify the method for setting the module's IP address.

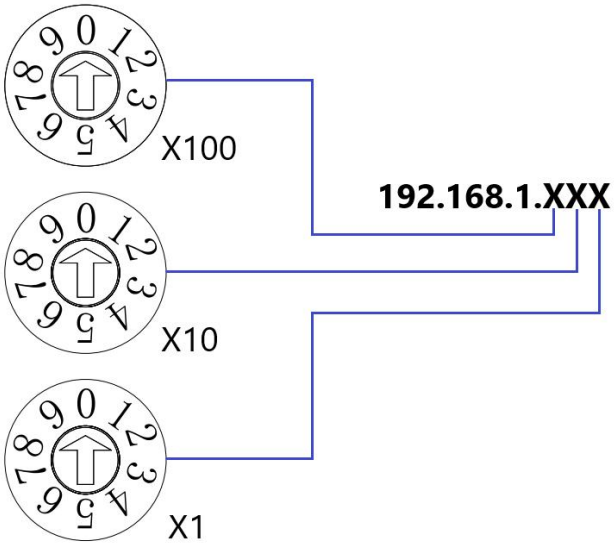

Setting value (decimal)	IP address setting method
000	The rotary switch is set to "000" at the factory, and the default IP address is 192.168.1.120. If you have modified it using the web interface, it will continue to start with the previous settings.
001～254	Set the lower byte of the IP address. Use "×100" for the hundreds digit, "×10" for the tens digit, and "×1" for the units digit, within the range of 1 to 254. The higher byte of the IP address continues the value set via the previous web connection. When the IP address is set to a value other than 000 using the rotary switch in the factory default state, the higher byte is 192.168.1.
255~	When the rotary switch is set to 255 or higher...After the module is powered on, it retrieves the default value or the previously stored value.

 Copyright © 2024-2025 Nanjing Solidot Electronic Technology Co., Ltd.

Precautions

1、 Tool Selection
Screwdriver specifications: 3 mm opening.
2、 The rotary switch IP must be set with the power off.
3、 If you need to change the IP address during communication, you must power on again for the new settings to take effect.

 Copyright © 2024-2025 Nanjing Solidot Electronic Technology Co., Ltd.

3.1.3 Indicator function

Modbus TCP Coupler Indicator Definition				
Logo	**Name**	**Color**	**State**	**Status Description**
PWR	Power Indicator	GREEN	ON	The module power supply is working normally.
			OFF	Module not powered or power supply abnormal
OVR	Overload Indicator	RED	OFF	Not overloaded
			ON	The load reaches 90% (±5%) or more.
NS	Network status indicator	GREEN	ON	Modbus TCP connection establishment and communication
			OFF	Modbus TCP connection not established.
IOR	IO communication indicator	GREEN	ON	I/OProcess data has been established
			Flashing 1Hz	No business data interaction
			Flashing 10Hz	Coupler firmware upgrade
IOE	IO error indicator	RED	ON	Communication error
			OFF	No communication issues

Network status indicator definition				
Logo	**Name**	**Color**	**State**	**Status Description**
X1	Network status indicator	ORANGE	Flashing	Connection established and data exchanged
			OFF	No data interaction or anomaly
		GREEN	ON	Establish network connection
			OFF	No network connection established or abnormal
X2	Network status indicator	ORANGE	Flashing	Connection established and data exchanged
			OFF	No data interaction or anomaly
		GREEN	ON	Establish network connection
			OFF	No network connection established or abnormal

 Copyright © 2024-2025 Nanjing Solidot Electronic Technology Co., Ltd.

3.1.4 Product Parameters

3.1.4.1 Interface parameters

Modbus TCP interface parameters	
bus protocol	Modbus TCP
Number of stations	It depends on the number of slave stations supported by the main station.
Data transmission medium	Ethernet CAT5 cable
Transmission rate	100Mbps
Minimum loop time[1]	1ms
Transmission distance	≤100m (distance between stations)
Bus interface	2×RJ45
Maximum number of modules connected in series	32
Input process data volume	512 Bytes[2]
Output process data volume	512 Bytes

Note [1]: Cycle time (scan cycle) between PLC and coupler.

Note [2]: The total length of the uplink data does not exceed 512 bytes, and the total length of the downlink data does not exceed 512 bytes.

3.1.4.2 Power parameters

Power parameters	
Input voltage	SELV Input 24VDC (18V~36V)
Input current	Max: 600mA (24VDC)
Backplane power supply current	Max: 2A
Backplane power supply voltage	5VDC

3.1.4.3 General parameters

General technical parameters		
Specifications and dimensions		106.4×43×61mm
weight		160g
Usage Environment	Operating temperature	-20℃~+60℃
	Storage temperature	-40℃~+80℃
	relative humidity	95%, no condensation
	Altitude	≤2000m
	Vibration resistance	IEC 60068–2–6sinusoidal vibration 5Hz~8.4Hz,3.5mm,8.4Hz~150Hz,1g

 Copyright © 2024-2025 Nanjing Solidot Electronic Technology Co., Ltd.

		X/Y/Z Triaxial10 One cycle/Axial (1)00min)	
	Impact resistance	IEC 60068−2−27Mechanical shock 150m/s2,11ms, ±X/Y/Z Six directions 3Second-rate/Direction, Together 18 Second-rate	
	Protection level	IP20	
	Overvoltage category	I	
	Pollution level	Level 2	
Electromagnetic compatibility requirements	electrostatic discharge	Level 3	Contact ±8kV, Air ±8kV, IEC61000-4-2
	surge	Level 3	1KV DM 2KV CM, IEC61000-4-5
	Electrical Fast Burst	Level 4	Power cord ±4KV, IEC61000-4-4
Module error self-recovery		support	
Alarm		support	
Firmware upgrade		support	
Short circuit protection		Supports (automatic recovery mechanism)	
Reverse connection protection		Supports (automatic recovery mechanism)	
Surge protection		support	
CE certification		EMC EN 61131-2 EN IEC 61000-6-4 EN IEC 61000-6-2	
		LVD EN 61010-1:2010/A1 EN IEC 61010-2-201	
RoHS certification		EU Directive 2011/65/EU Annex II	

Copyright © 2024-2025 Nanjing Solidot Electronic Technology Co., Ltd.

3.1.5 Power wiring diagram

Using a 24VDC power module, refer to the wiring method and connect the power supply according to the circuit shown in the diagram below, while ensuring reliable grounding (twisted pair cable is

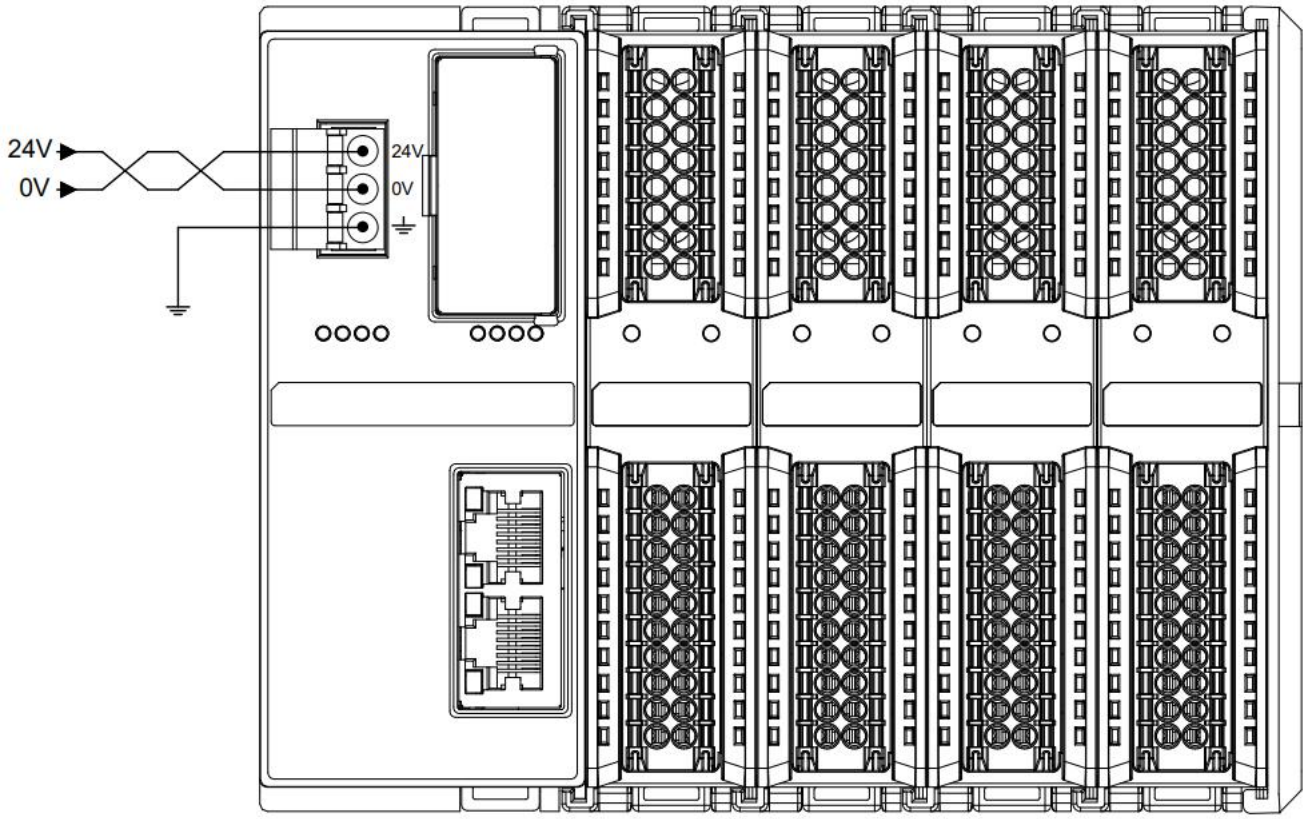

recommended for the power supply).

3.1.6 Bus wiring

It uses a standard RJ45 network interface and a standard crystal connector. The pin assignments are shown in the table below.

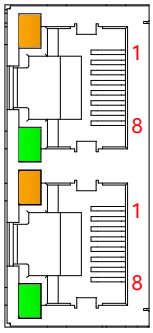

pin number	Signal
1	TD+
2	TD-
3	RD+
4	one
5	one
6	RD-
7	one
8	one

☛ Precautions

 Copyright © 2024-2025 Nanjing Solidot Electronic Technology Co., Ltd.

- Category 5 or higher double-shielded (braided mesh + aluminum foil) STP cables are recommended for use as communication cables.
- The length of the cable between devices must not exceed 100m.

3.1.7 Outline Dimensions

Coupler dimensions (unit: mm)

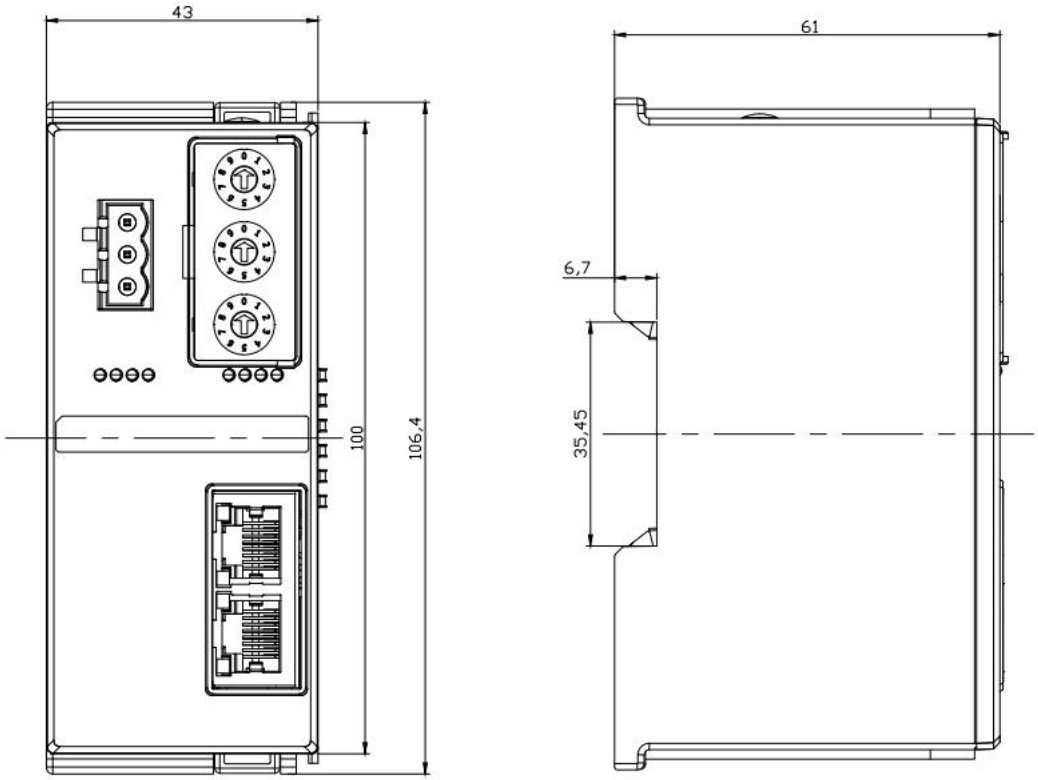

 Copyright © 2024-2025 Nanjing Solidot Electronic Technology Co., Ltd.

3.2 Digital I/O modules

3.2.1 Panel structure

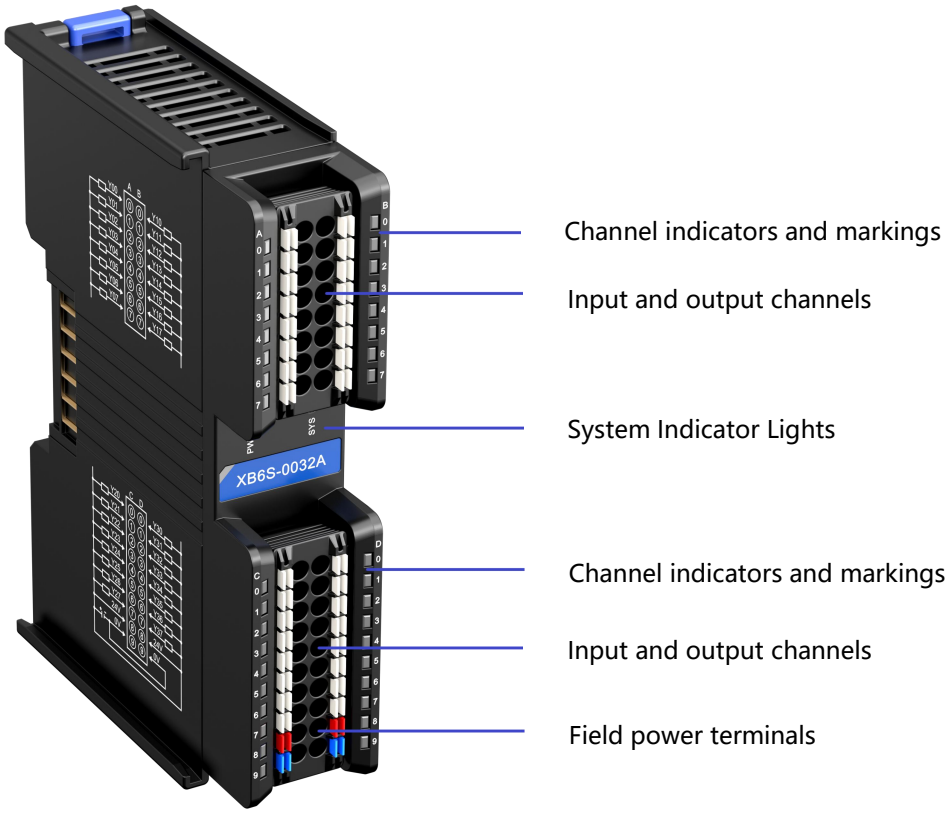

3.2.2 Indicator function

Digital I/O module Indicator definitions				
Logo	**Name**	**Color**	**State**	**Status Description**
PWR	Power Indicator	GREEN	ON	Power supply is normal
			OFF	The product is not powered on or the power supply is abnormal.
SYS	Operating status indicator	GREEN	ON	The system is running normally.
			Flashing 1Hz	No business data interaction, waiting to establish business data interaction.
			Flashing10Hz	Firmware upgrade
			OFF	The system is not working.
0~7	Input channel indicator	GREEN	ON	The module channel has a signal input.
			OFF	The module channel has no signal input or the signal input is abnormal.
0~7	Output channel indicator	GREEN	ON	The module channel has signal output.
			OFF	The module channel has no signal output or the signal output is abnormal.

 Copyright © 2024-2025 Nanjing Solidot Electronic Technology Co., Ltd.

3.2.3 Technical parameters

3.2.3.1 Digital input module parameters

Digital input				
Product Model	XB6S-3200	XB6S-3200N	XB6S-1600	XB6S-0800
Bus input power supply rated voltage	5VDC (4.5V~5.5V)			
Bus input power supply rated current	≤100mA	≤70mA	≤80mA	≤60mA
Input rated voltage	24VDC (20.4V~28.8V)			
Typical input current	5mA/ch (24VDC)			
Number of input signal points	32	32	16	8
Input signal type	NPN/PNP compatible			
Input signal form	direct voltage input form Sink input: NPN open-collector input form Source type input: PNP open collector input form			
OFF voltage/OFF current	-3V to +5V / less than 0.9mA			
ON voltage/ON current	11V~30V/2.1mA or more			
reaction time	<50us			
Input filtering	No filtering, 0.1ms, 0.2ms, 0.5ms, 1ms, 2ms, 3ms (factory setting), 4ms...18ms, 19ms, 20ms			
Maximum input frequency	150Hz (Filtering time: 3ms)			
Input impedance	5.4KΩ			
Isolation methods	Optical isolation			
Isolation and withstand voltage	500VAC			
Rated current consumption	100mA	70mA	80mA	60mA
Power consumption	0.5W	0.35W	0.4W	0.3W
Numeric input type	Type1/Type3			
Channel Indicators	Green LED lights			

 Copyright © 2024-2025 Nanjing Solidot Electronic Technology Co., Ltd.

3.2.3.2 Digital Input/Output Module Parameters

Digital input		
Product Model	XB6S-1616A	XB6S-1616B
Bus input power supply rated voltage	5VDC (4.5V~5.5V)	
Bus input power supply rated current	≤130mA	≤100mA
Input rated voltage	24VDC (20.4V~28.8V)	
Typical input current	5mA/ch (24VDC)	
Number of input signal points	16	16
Input signal type	NPN/PNP compatible	
Input signal form	direct voltage input form Sink input: NPN open-collector input form Source type input: PNP open collector input form	
OFF voltage/OFF current	-3V to +5V / less than 0.9mA	
ON voltage/ON current	11V~30V/2.1mA or more	
reaction time	<50us	
Input filtering	No filtering, 0.1ms, 0.2ms, 0.5ms, 1ms, 2ms, 3ms (factory setting), 4ms...18ms, 19ms, 20ms	
Maximum input frequency	150Hz (Filtering time: 3ms)	
Input impedance	5.4KΩ	
Isolation methods	Optical isolation	
Isolation and withstand voltage	500VAC	
Rated current consumption	130mA	100mA
Power consumption	0.65W	0.5W
Numeric input type	Type1/Type3	
Channel Indicators	Green LED lights	
Digital output		
Number of output signal points	16	16
Output signal type	NPN	PNP
Field-side input voltage range	24VDC (20.4V~28.8V)	
Output voltage drop	<1V	
Output load type	Resistive load, inductive load, lamp load	
Single-channel rated current	Max: 0.5A (see details)Figure 1)	

 Copyright © 2024-2025 Nanjing Solidot Electronic Technology Co., Ltd.

Leakage current	<10uA
reaction time	<150us
Output channel protection	Short circuit protection (automatic recovery mechanism)
Module protection	Reverse connection protection (automatic recovery mechanism), field-side surge protection
Isolation methods	Optical isolation
Isolation and withstand voltage	500VAC
Channel Indicators	Green LED lights

Copyright © 2024-2025 Nanjing Solidot Electronic Technology Co., Ltd.

3.2.3.3 Digital output module parameters

Digital output				
Product Model	XB6S-0032A	XB6S-0032B	XB6S-0032AN	XB6S-0032BN
Bus input power supply rated voltage	5VDC (4.5V~5.5V)			
Bus input power supply rated current	≤150mA	≤110mA	≤130mA	≤80mA
Field-side input voltage range	24VDC (20.4V~28.8V)			
Number of output signal points	32	32	32	32
Output signal type	NPN	PNP	NPN	PNP
Output voltage drop	<1V			
Output load type	Resistive load, inductive load, lamp load			
Single-channel rated current	Max: 0.5A (see details)Figure 1)		Max: 0.1A	
Leakage current	<10uA			
reaction time	<150us			
Output channel protection	Short circuit protection (automatic recovery mechanism)			
Module protection	Reverse connection protection (automatic recovery mechanism), field-side surge protection			
Isolation methods	Optical isolation			
Isolation and withstand voltage	500VAC			
Rated current consumption	150mA	110mA	130mA	80mA
Power consumption	0.75W	0.55W	0.65W	0.4W
Channel Indicators	Green LED lights			

Digital output				
Product Model	XB6S-0008A	XB6S-0008B	XB6S-0016A	XB6S-0016B
Bus input power supply rated voltage	5VDC (4.5V~5.5V)			
Bus input power supply rated current	≤70mA	≤60mA	≤110mA	≤90mA
Field-side input voltage range	24VDC (20.4V~28.8V)			
Number of output signal points	8	8	16	16
Output signal type	NPN	PNP	NPN	PNP
Output voltage drop	<1V			
Output load type	Resistive load, inductive load, lamp load			

 Copyright © 2024-2025 Nanjing Solidot Electronic Technology Co., Ltd.

Single-channel rated current	Max: 0.5A (see details)Figure 1)			
Leakage current	<10uA			
reaction time	<150us			
Output channel protection	Short circuit protection (automatic recovery mechanism)			
Module protection	Reverse connection protection (automatic recovery mechanism), field-side surge protection			
Isolation methods	Optical isolation			
Isolation and withstand voltage	500VAC			
Rated current consumption	70mA	60mA	110mA	90mA
Power consumption	0.35W	0.3W	0.55W	0.45W
Channel Indicators	Green LED lights			

Copyright © 2024-2025 Nanjing Solidot Electronic Technology Co., Ltd.

3.2.3.4 Relay output module parameters

Relay output	
Product Model	XB6S-0012J/6
Bus input power supply rated voltage	5VDC (4.5V~5.5V)
Bus input power supply rated current	≤100mA
Field-side input voltage range	24VDC (20.4V~28.8V)
Number of output signal points	12
Output format	Relay
Output load type	Resistive load, inductive load, lamp load
minimum load current	10mA
minimum load voltage	5V
Single channel rated voltage	24VDC
Single-channel rated current	Max: 2A (see details)Figure 2)
Hardware output response time	10ms/10ms
Module protection	Field-side reverse connection protection (automatic recovery mechanism), field-side surge protection
Isolation methods	Optical isolation + relay isolation
Isolation and withstand voltage	1500VAC
Rated current consumption	100mA
Power consumption	0.5W
Mechanical life	Minimum 20 million operations (18,000 operations/hour)
Electrical life	Minimum 100,000 operations (2A, 24VDC, inductive load)
Channel Indicators	Green LED lights

3.2.3.5 General technical parameters

General technical parameters	
Specifications and dimensions	106.4 × 25.7 × 72.3mm
weight	32-channel DIO: 110g
	16-channel DIO: 90g
	8-channel DIO: 90g
	XB6S-0012J/6: 135g

 Copyright © 2024-2025 Nanjing Solidot Electronic Technology Co., Ltd.

Operating temperature	-20℃~+60℃
Storage temperature	-40℃~+80℃
relative humidity	95%, no condensation
Altitude	≤2000m
Pollution level	Level 2
Protection level	IP20
Safety certification	UL certification, CE certification
Green certification	RoHS certification, REACH certification

Copyright © 2024-2025 Nanjing Solidot Electronic Technology Co., Ltd.

Figure 1:

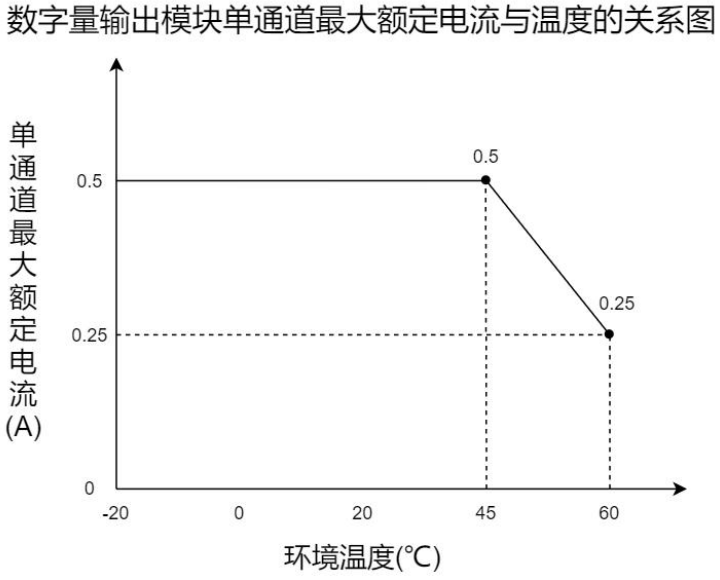

Figure 2:

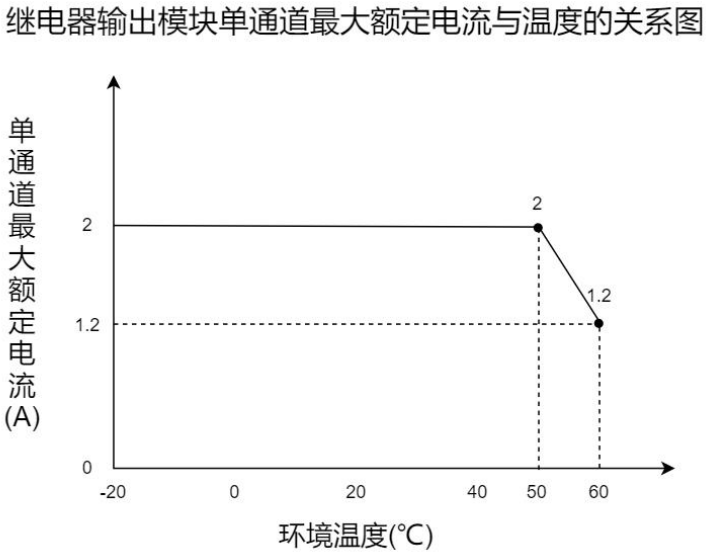

 Copyright © 2024-2025 Nanjing Solidot Electronic Technology Co., Ltd.

3.2.4 Wiring diagram

3.2.4.1 XB6S-3200

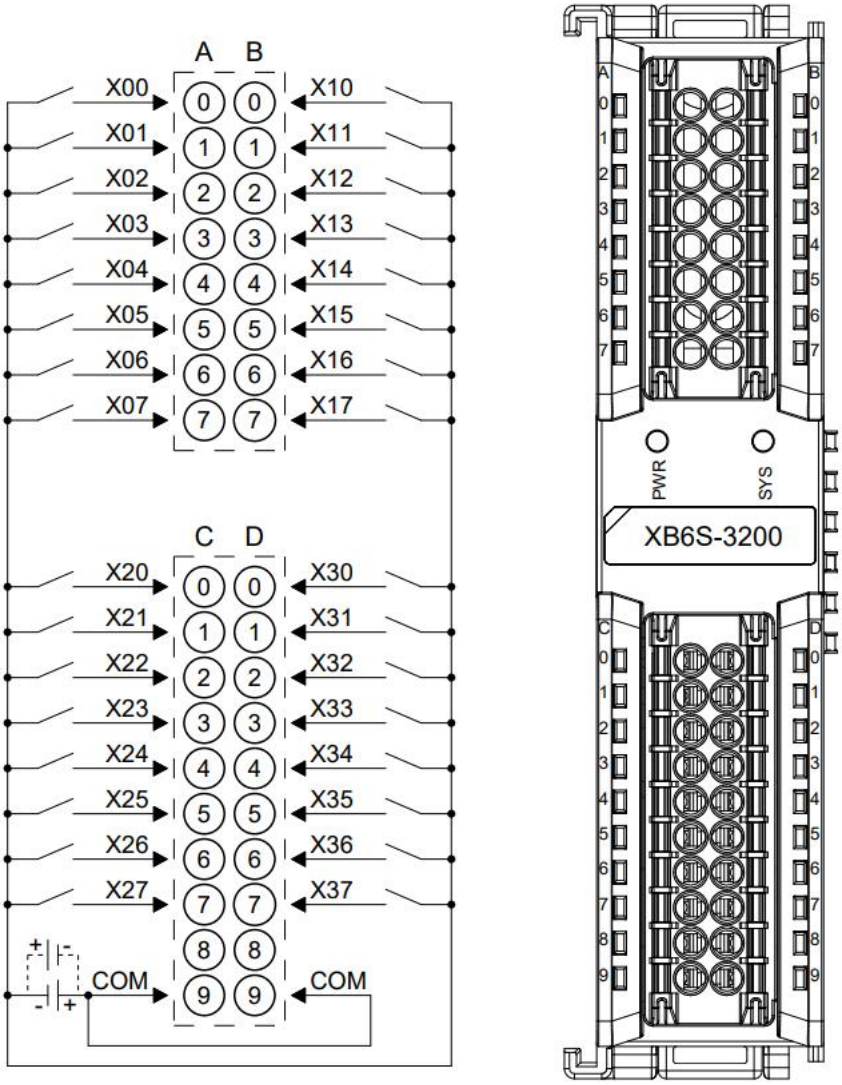

*COM internal conduction; NPN/PNP compatible

 Copyright © 2024-2025 Nanjing Solidot Electronic Technology Co., Ltd.

3.2.4.2 XB6S-1600

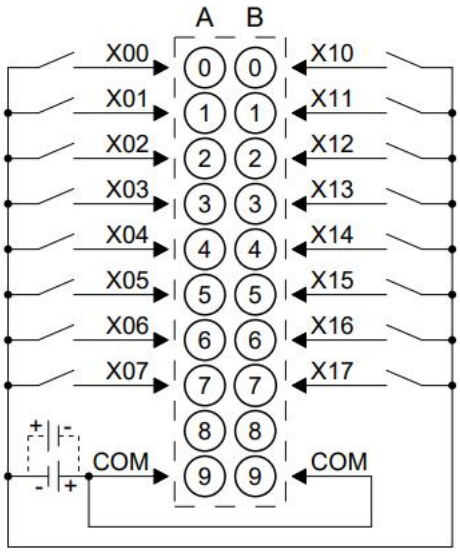

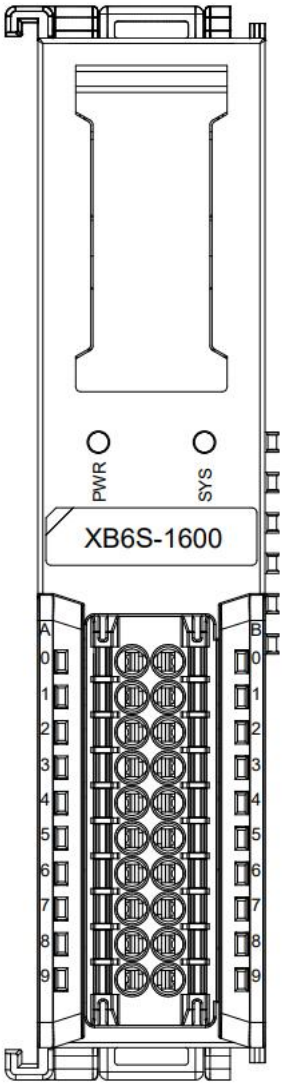

*COM internal conduction; NPN/PNP compatible

 Copyright © 2024-2025 Nanjing Solidot Electronic Technology Co., Ltd.

3.2.4.3 XB6S-0800

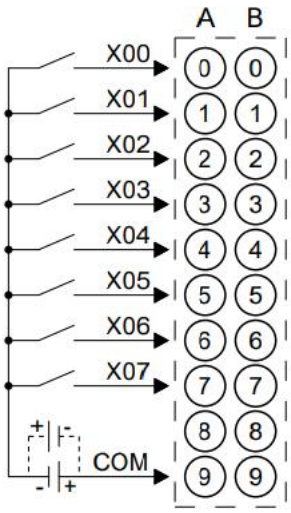

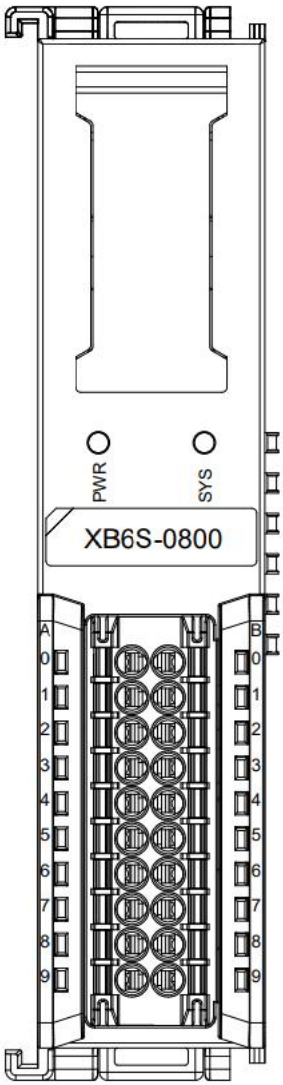

*NPN/PNP compatible

Copyright © 2024-2025 Nanjing Solidot Electronic Technology Co., Ltd.

3.2.4.4 XB6S-1616A

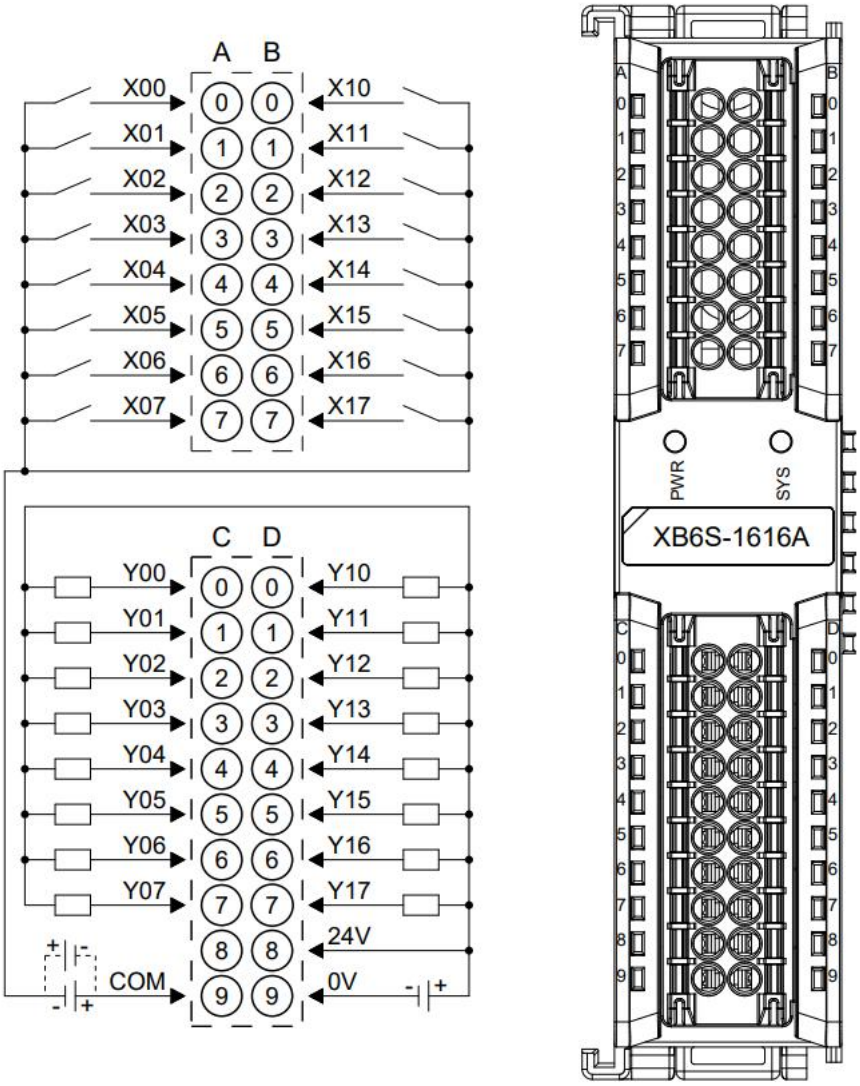

*COM is the common terminal for DI, DI is NPN/PNP compatible, and DO is NPN.

 Copyright © 2024-2025 Nanjing Solidot Electronic Technology Co., Ltd.

3.2.4.5 XB6S-1616B

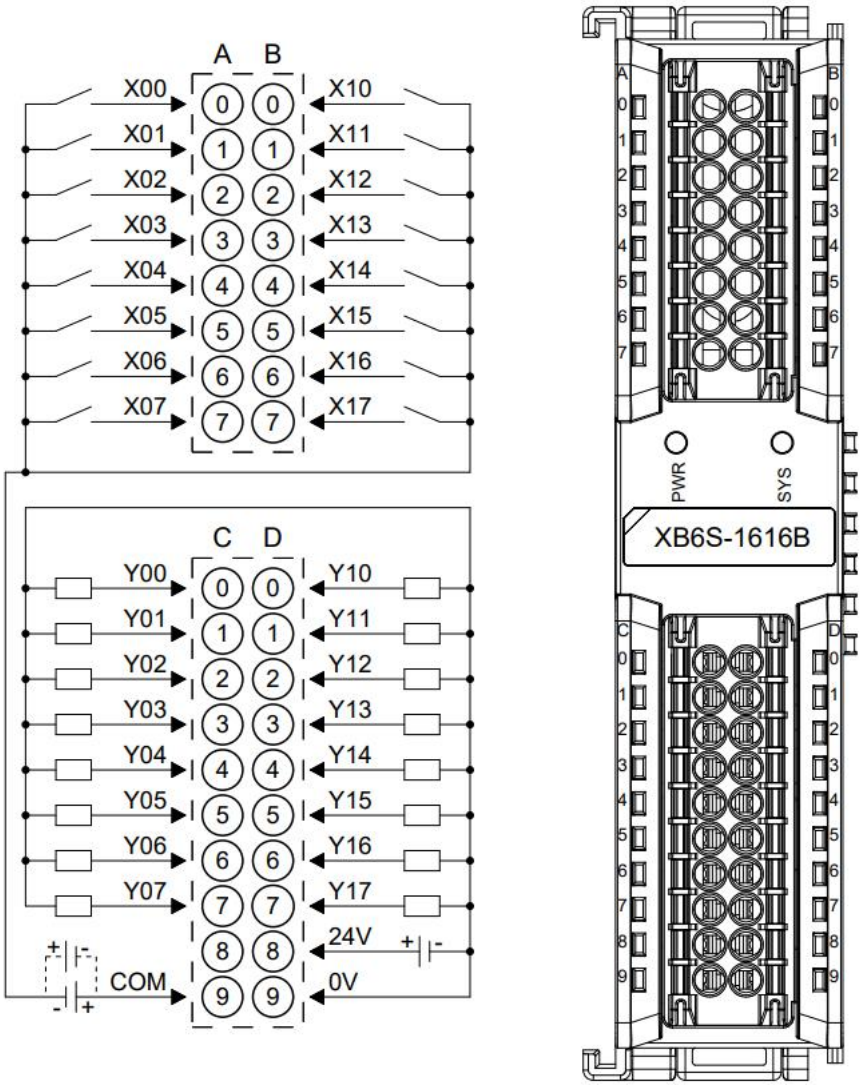

*COM is the common terminal for DI, DI is NPN/PNP compatible, and DO is PNP.

 Copyright © 2024-2025 Nanjing Solidot Electronic Technology Co., Ltd.

3.2.4.6 XB6S-0032A

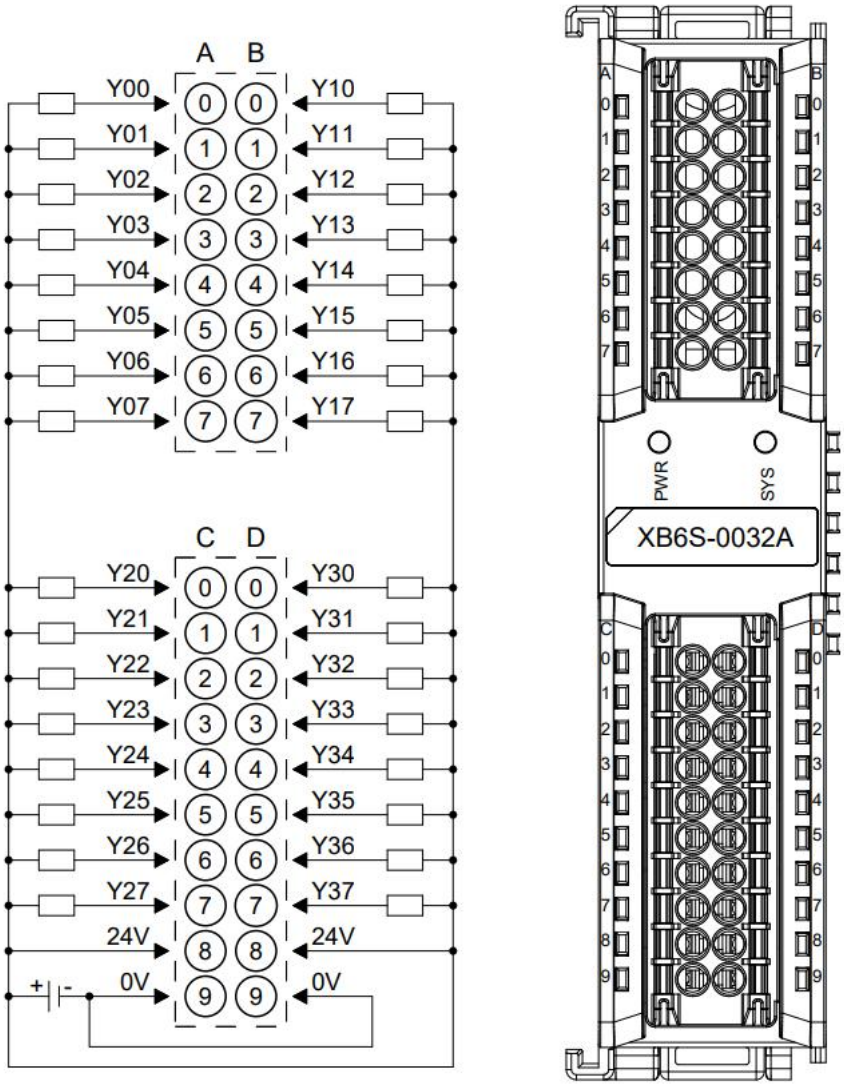

*24V internal conduction; 0V internal conduction

*The load's common power supply must share the same power supply as the module.

 Copyright © 2024-2025 Nanjing Solidot Electronic Technology Co., Ltd.

3.2.4.7 XB6S-0032B

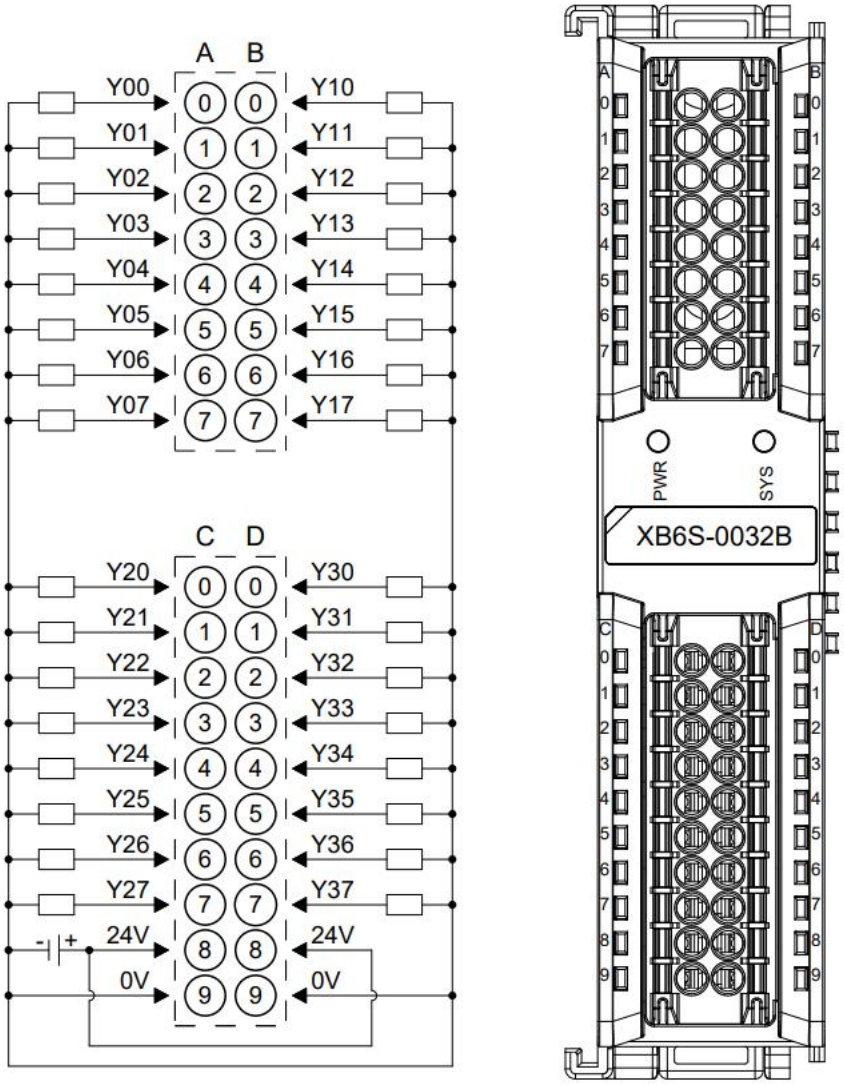

*24V internal conduction; 0V internal conduction

*The load's common power supply must share the same power supply as the module.

 Copyright © 2024-2025 Nanjing Solidot Electronic Technology Co., Ltd.

3.2.4.8 XB6S-0016A

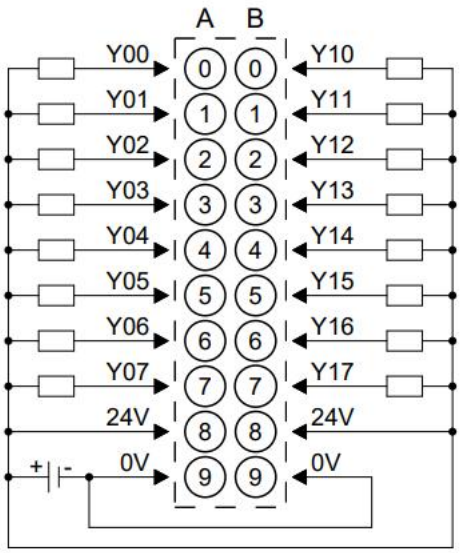

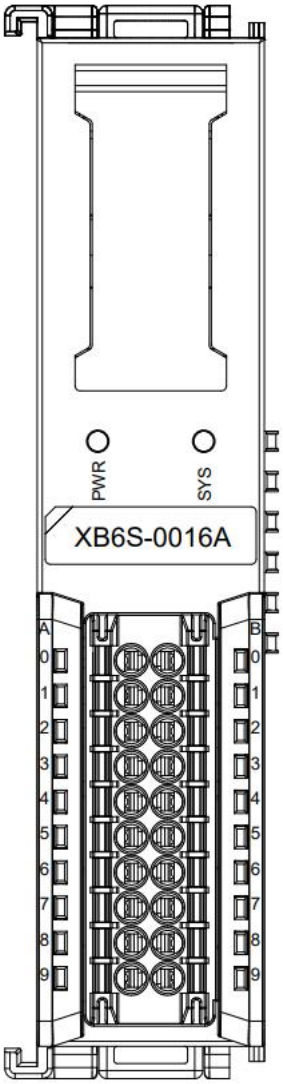

*24V internal conduction; 0V internal conduction

*The load's common power supply must share the same power supply as the module.

 Copyright © 2024-2025 Nanjing Solidot Electronic Technology Co., Ltd.

3.2.4.9 XB6S-0016B

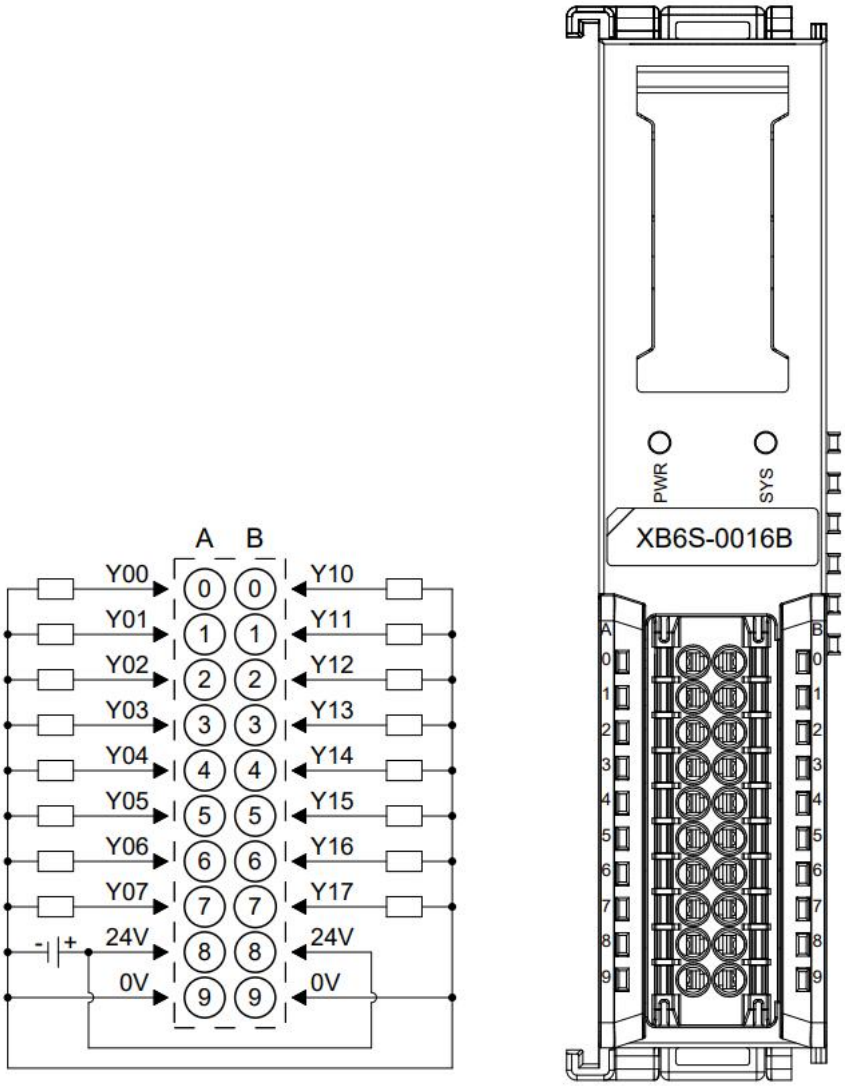

*24V internal conduction; 0V internal conduction

*The load's common power supply must share the same power supply as the module.

 Copyright © 2024-2025 Nanjing Solidot Electronic Technology Co., Ltd.

3.2.4.10 XB6S-0008A

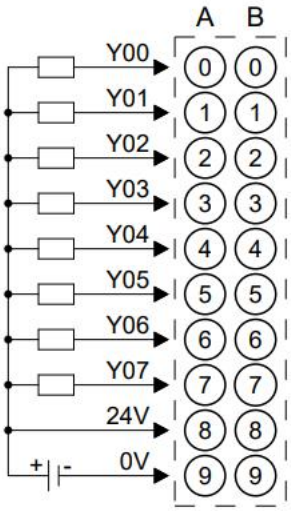

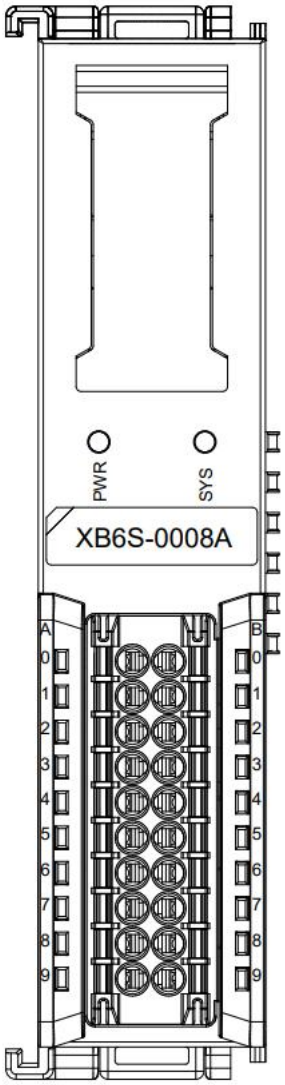

 Copyright © 2024-2025 Nanjing Solidot Electronic Technology Co., Ltd.

3.2.4.11 XB6S-0008B

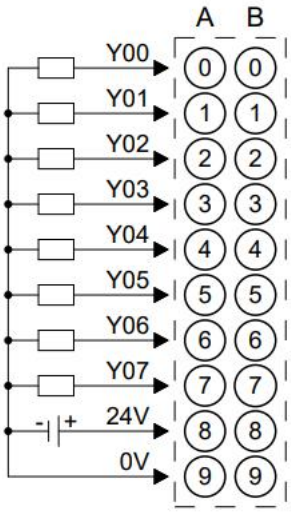

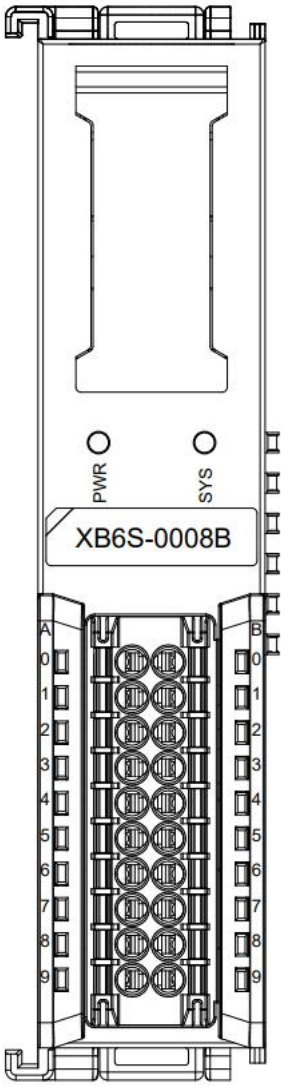

Copyright © 2024-2025 Nanjing Solidot Electronic Technology Co., Ltd.

3.2.4.12 XB6S-3200N

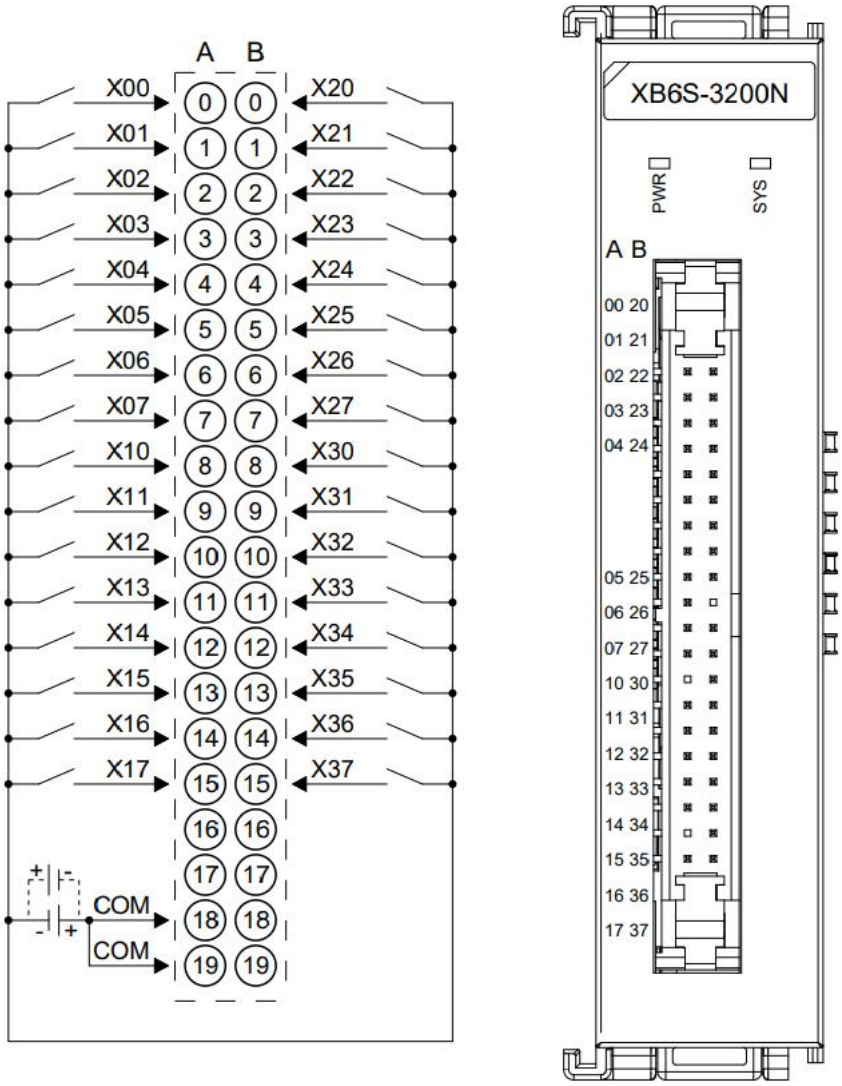

*COM internal conduction; NPN/PNP compatible

 Copyright © 2024-2025 Nanjing Solidot Electronic Technology Co., Ltd.

3.2.4.13 XB6S-0032AN

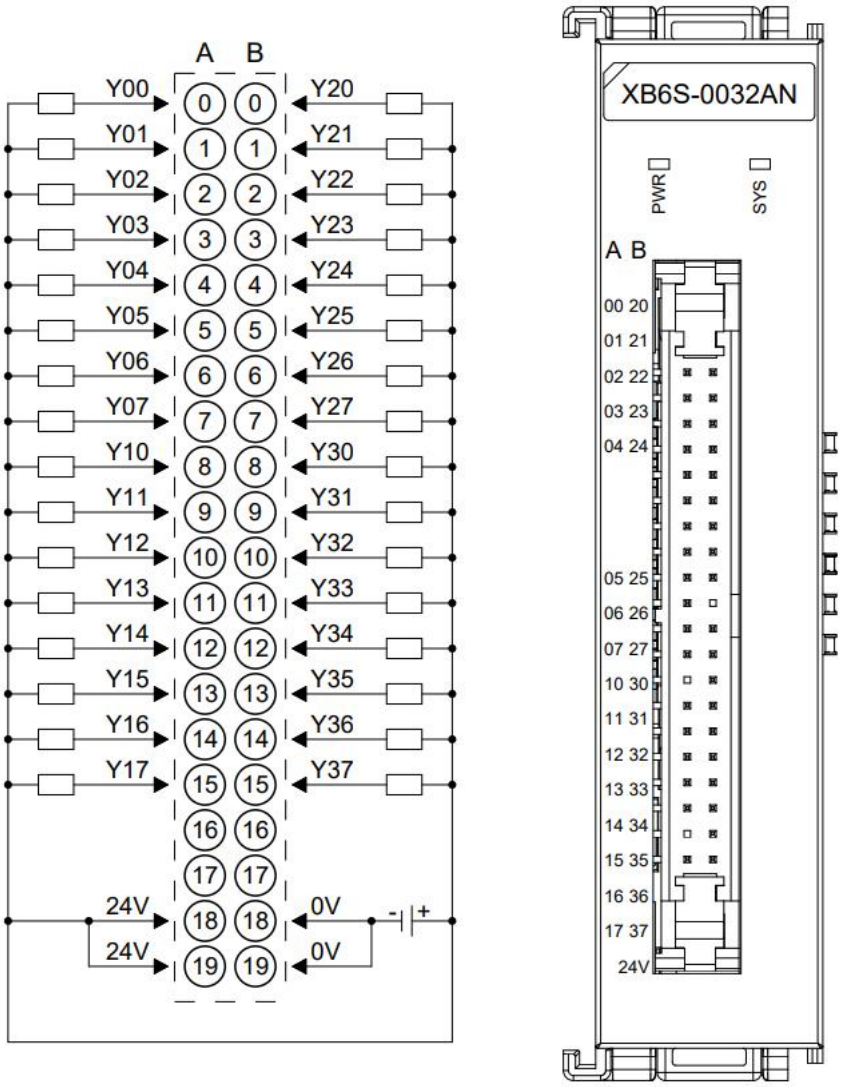

*24V internal conduction; 0V internal conduction

 Copyright © 2024-2025 Nanjing Solidot Electronic Technology Co., Ltd.

3.2.4.14 XB6S-0032BN

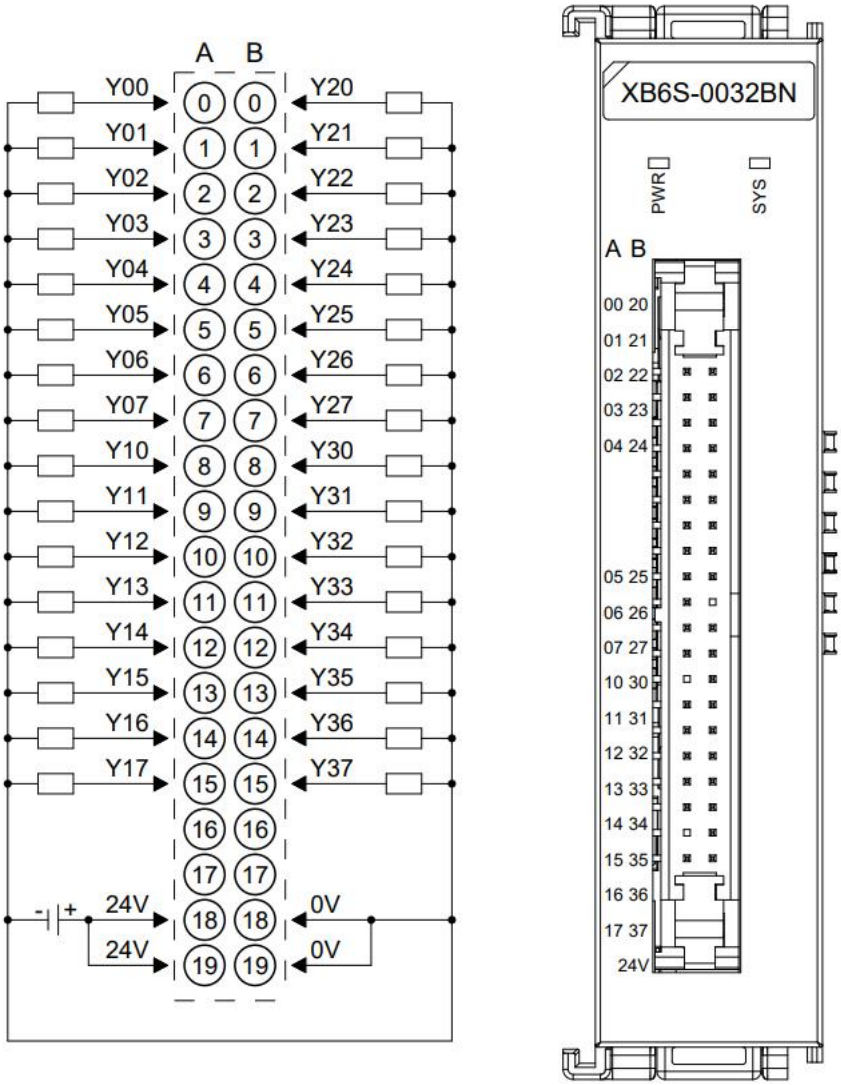

*24V internal conduction; 0V internal conduction

 Copyright © 2024-2025 Nanjing Solidot Electronic Technology Co., Ltd.

3.2.4.15 XB6S-0012J/6

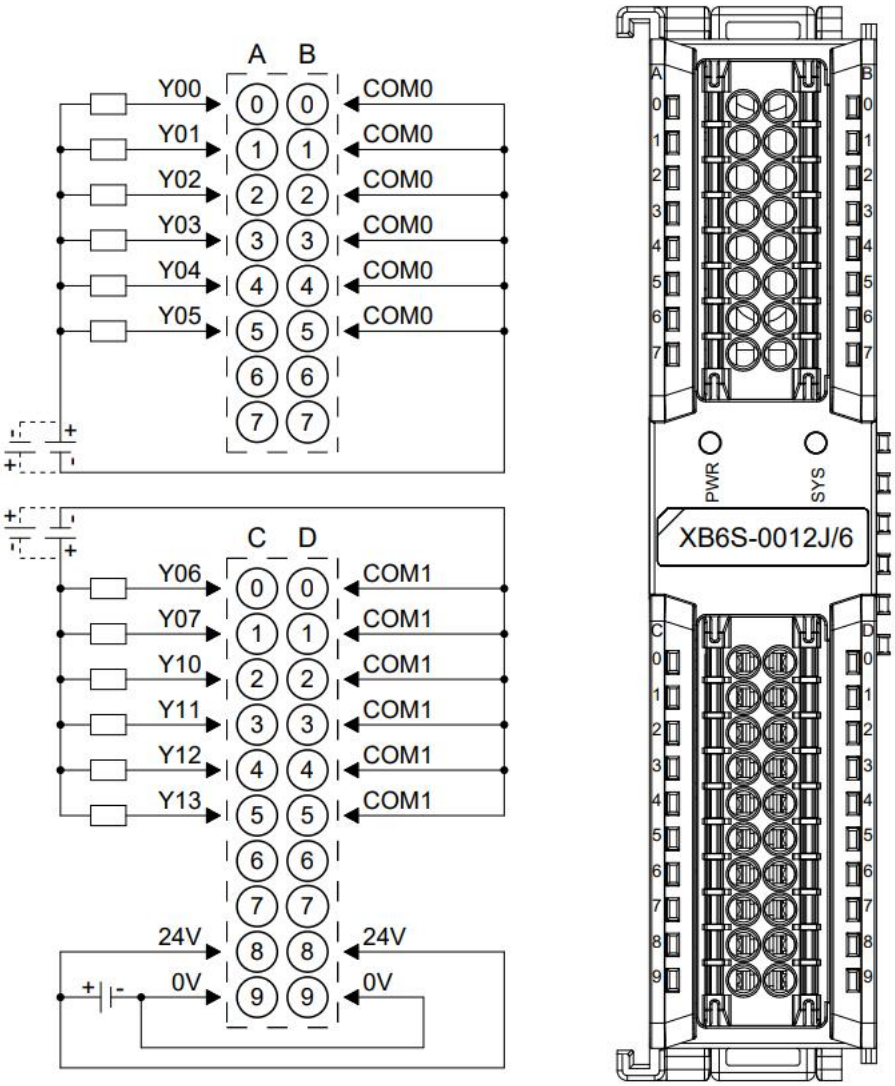

*24V internal conduction; 0V internal conduction

*COM0 is internally powered; COM1 is internally powered.

Copyright © 2024-2025 Nanjing Solidot Electronic Technology Co., Ltd.

3.2.5 Outline Dimensions

8/16 channel digital I/O module dimensions (unit: mm)

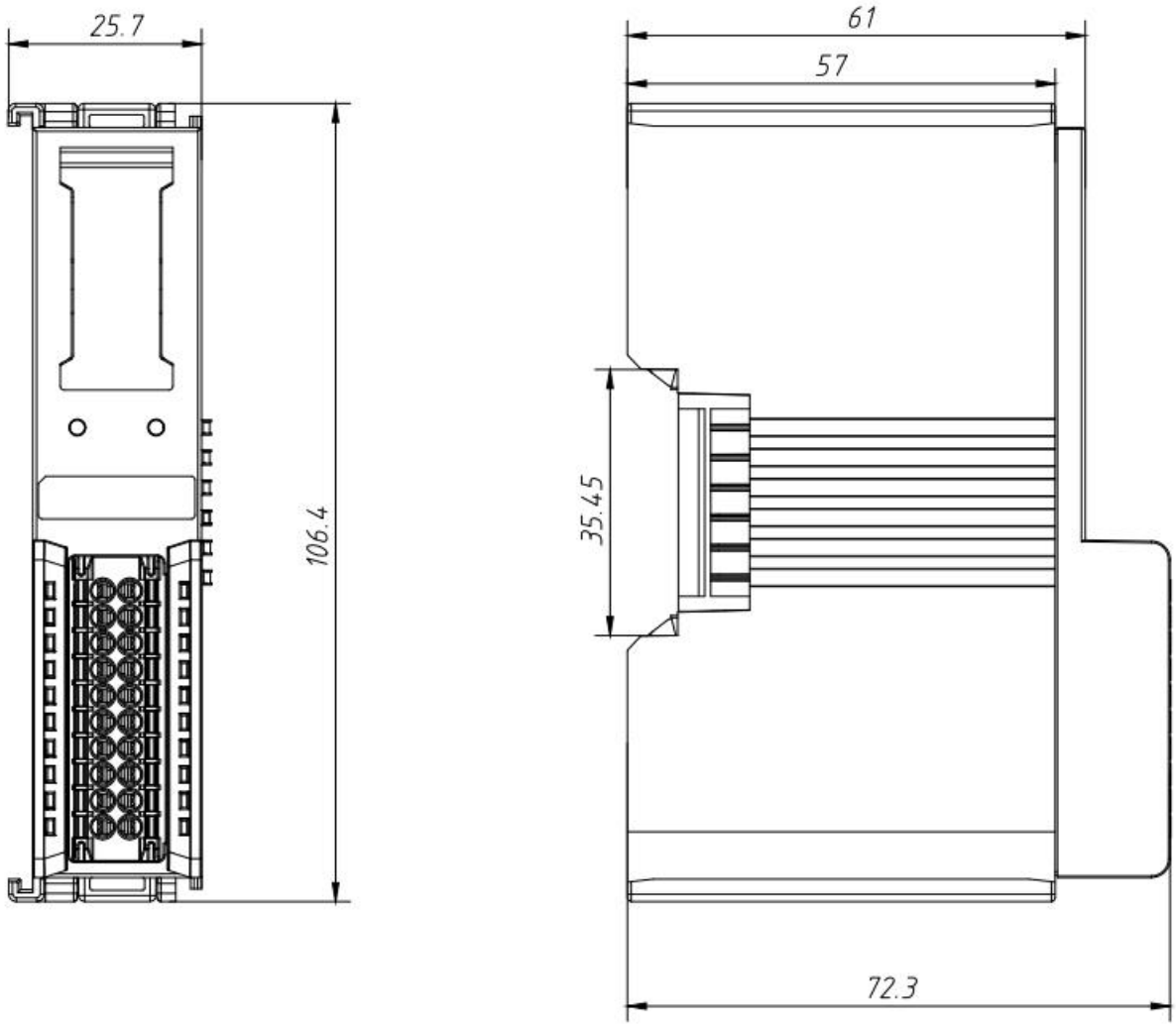

 Copyright © 2024-2025 Nanjing Solidot Electronic Technology Co., Ltd.

32-channel digital I/O module dimensions (unit: mm)

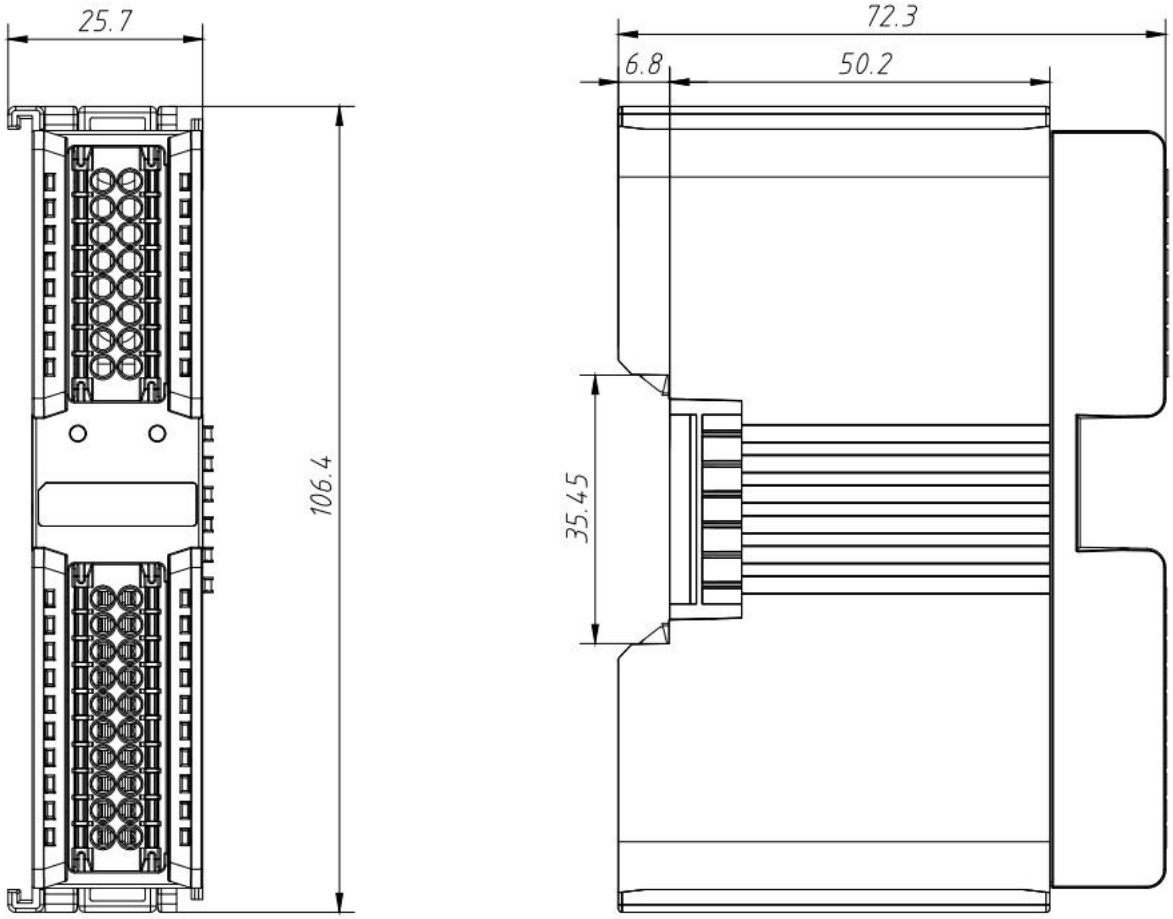

 Copyright © 2024-2025 Nanjing Solidot Electronic Technology Co., Ltd.

3.3 Analog I/O module

3.3.1 Panel structure

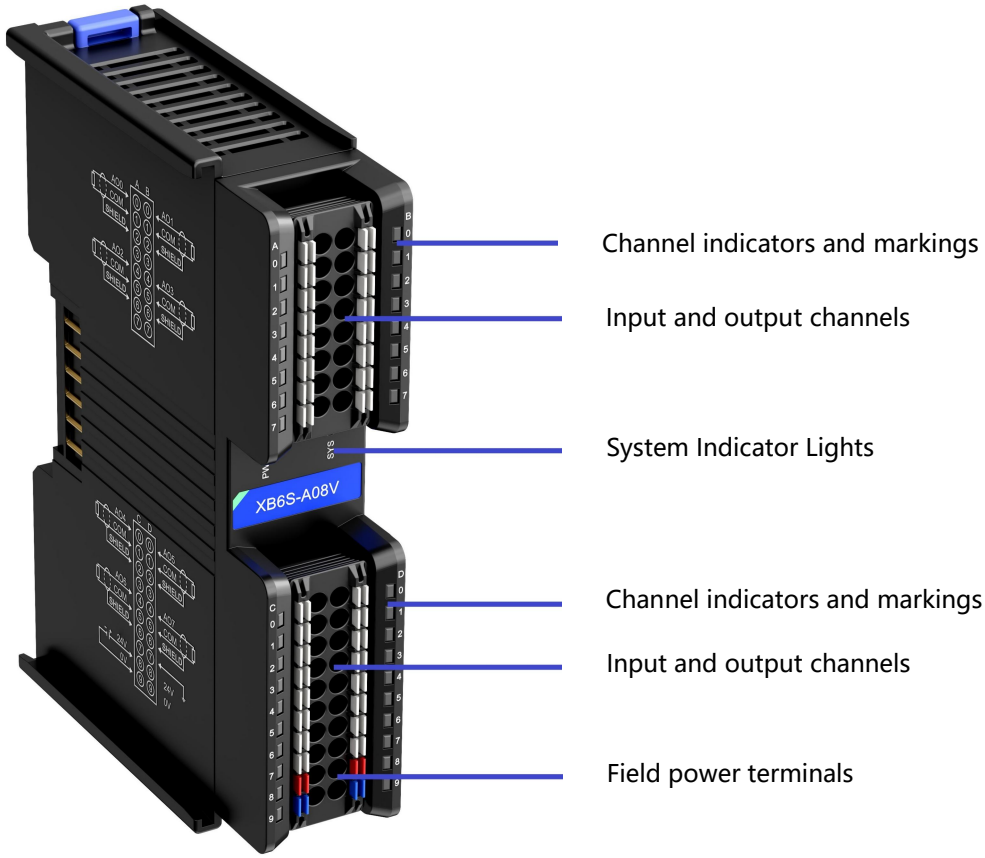

3.3.2 Indicator function

Analog I/O module Indicator definitions				
logo	**name**	**color**	**state**	**Status Description**
PWR	Power Indicator	GREEN	ON	Power supply is normal
			OFF	The product is not powered on or the power supply is abnormal.
SYS	Operating status indicator	GREEN	ON	The system is running normally.
			Flashing 1Hz	No business data interaction, waiting to establish business data interaction.
			Flashing 10Hz	Firmware upgrade
			OFF	The system is not working.
0~7	Input channel indicator	GREEN	ON	The module channel has a signal input.
			OFF	The module channel has no signal input or the signal input is abnormal.
0~7	Output channel indicator	GREEN	ON	The module channel has signal output.
			OFF	The module channel has no signal output or

 Copyright © 2024-2025 Nanjing Solidot Electronic Technology Co., Ltd.

				the signal output is abnormal.

Copyright © 2024-2025 Nanjing Solidot Electronic Technology Co., Ltd.

3.3.3 Technical parameters

3.3.3.1 Analog input module parameters

Analog input module		
Product Model	XB6S-A80VD	XB6S-A80ID
Bus input power supply rated voltage	5VDC (4.5V~5.5V)	
Bus input power supply rated current	≤210mA	
Input points	8	8
Input type	Voltage type	Current type
Input signal	Disable、-10V~+10V、0V~10V、-5V~+5V, 0V~5V, 1V~5V (range adjustable, default is -10V~+10V)	Disable, 4mA~20mA, 0mA~20mA, -20mA~+20mA (The measurement range is adjustable, with the default value being 0mA~20mA)
Input signal type	Differential signaling	
Channel reaction time	550us / ch 850us / 8ch	
resolution	16 bits	
Sampling rate (full channel)	≤1ksps	
accuracy	±0.1% at 25℃, ±0.3% over the entire temperature range.	
Input filtering	support	
Smooth series	1~200	
Input impedance (voltage type)	⩾1MΩ	-
Input impedance (current type)	-	≤250Ω
Common mode voltage range	12VAC	-
Maximum allowable voltage for the channel (voltage type)	30V	-
Maximum allowable current for the channel (current type)	-	30mA
The system must not be affected	In the event of a short circuit due to a fault in the ±15V power supply, the system's +5V power supply must not be affected.	
Potential isolation	There is no isolation between channels, isolation between channels and the backplane bus, and isolation between channels and the power supply voltage.	
Input overload protection	Support clamp protection	Supports rate limiting protection

 Copyright © 2024-2025 Nanjing Solidot Electronic Technology Co., Ltd.

Input protection	±30V	±30mA
Isolation and withstand voltage	500VDC	
Rated current consumption	210mA	
Power consumption	1.05W	
Channel Indicators	Green LED lights	

Copyright © 2024-2025 Nanjing Solidot Electronic Technology Co., Ltd.

Analog input module		
Product Model	XB6S-A80V	XB6S-A80I
Bus input power supply rated voltage	5VDC (4.5V~5.5V)	
Bus input power supply rated current	≤260mA	≤110mA
Input points	8	8
Input type	Voltage type	Current type
Input signal	Disable、-10V~+10V、0V~10V、-5V~+5V, 0V~5V, 1V~5V (range adjustable, default is -10V~+10V)	Disable, 4mA~20mA, 0mA~20mA (The measurement range is adjustable, with the default value being 0mA~20mA)
Input signal type	single-ended signal	
Channel reaction time	560us / ch 770us / 8ch	
resolution	16 bits	
Sampling rate (full channel)	≤1ksps	
accuracy	±0.1% at 25℃, ±0.3% over the entire temperature range.	
Input filtering	support	
Smooth series	1~200	
Input impedance (voltage type)	⩾400kΩ	-
Input impedance (current type)	-	≤100Ω
Maximum allowable voltage for the channel (voltage type)	30V	-
Maximum allowable current for the channel (current type)	-	30mA
The system must not be affected	In the event of a short circuit due to a fault in the ±15V power supply, the system's +5V power supply must not be affected.	
Potential isolation	There is no isolation between channels, isolation between channels and the backplane bus, and isolation between channels and the power supply voltage.	
Input overload protection	Support clamp protection	Supports rate limiting protection
Input protection	±30V	±30mA
Isolation and withstand voltage	500VDC	
Rated current consumption	260mA	110mA
Power consumption	1.35W	0.55W
Channel Indicators	Green LED lights	

 Copyright © 2024-2025 Nanjing Solidot Electronic Technology Co., Ltd.

Analog input module		
Product Model	XB6S-A40VD	XB6S-A40ID
Bus input power supply rated voltage	5VDC (4.5V~5.5V)	
Bus input power supply rated current	≤150mA	
Input points	4	4
Input type	Voltage type	Current type
Input signal	Disable、-10V~+10V、0V~10V、-5V~+5V, 0V~5V, 1V~5V (range adjustable, default is -10V~+10V)	Disable, 4mA~20mA, 0mA~20mA, -20mA~+20mA (The measurement range is adjustable, with the default value being 0mA~20mA)
Input signal type	Differential signaling	
Channel reaction time	300us / ch 600us / 4ch	
resolution	16 bits	
Sampling rate (full channel)	≤1ksps	
accuracy	±0.1% at 25℃, ±0.3% over the entire temperature range.	
Input filtering	support	
Smooth series	1~200	
Input impedance (voltage type)	⩾1MΩ	-
Input impedance (current type)	-	≤250Ω
Common mode voltage range	12VAC	-
Maximum allowable voltage for the channel (voltage type)	30V	-
Maximum allowable current for the channel (current type)	-	30mA
The system must not be affected	In the event of a short circuit due to a fault in the ±15V power supply, the system's +5V power supply must not be affected.	
Potential isolation	There is no isolation between channels, isolation between channels and the backplane bus, and isolation between channels and the power supply voltage.	
Input overload protection	Support clamp protection	Supports rate limiting protection
Input protection	±30V	±30mA
Isolation and withstand voltage	500VDC	

 Copyright © 2024-2025 Nanjing Solidot Electronic Technology Co., Ltd.

Rated current consumption	150mA
Power consumption	0.75W
Channel Indicators	Green LED lights

 Copyright © 2024-2025 Nanjing Solidot Electronic Technology Co., Ltd.

Analog input module		
Product Model	XB6S-A40V	XB6S-A40I
Bus input power supply rated voltage	5VDC (4.5V~5.5V)	
Bus input power supply rated current	≤180mA	≤100mA
Input points	4	4
Input type	Voltage type	Current type
Input signal	Disable、-10V~+10V、0V~10V、-5V~+5V, 0V~5V, 1V~5V (range adjustable, default is -10V~+10V)	Disable, 4mA~20mA, 0mA~20mA (The measurement range is adjustable, with the default value being 0mA~20mA)
Input signal type	single-ended signal	
Channel reaction time	400us / ch 700us / 4ch	300us / ch 600us / 4ch
resolution	16 bits	
Sampling rate (full channel)	≤1ksps	
accuracy	±0.1% at 25℃, ±0.3% over the entire temperature range.	
Input filtering	support	
Smooth series	1~200	
Input impedance (voltage type)	⩾400kΩ	-
Input impedance (current type)	-	≤100Ω
Maximum allowable voltage for the channel (voltage type)	30V	-
Maximum allowable current for the channel (current type)	-	30mA
The system must not be affected	In the event of a short circuit due to a fault in the ±15V power supply, the system's +5V power supply must not be affected.	
Potential isolation	There is no isolation between channels, isolation between channels and the backplane bus, and isolation between channels and the power supply voltage.	
Input overload protection	Support clamp protection	Supports rate limiting protection
Input protection	±30V	±30mA
Isolation and withstand voltage	500VDC	
Rated current consumption	180mA	100mA
Power consumption	0.95W	0.5W
Channel Indicators	Green LED lights	

 Copyright © 2024-2025 Nanjing Solidot Electronic Technology Co., Ltd.

3.3.3.2 Analog output module parameters

Analog output module		
Product Model	XB6S-A08V	XB6S-A08I
Bus input power supply rated voltage	5VDC (4.5V~5.5V)	
Bus input power supply rated current	≤100mA	
Field-side input voltage range	24VDC (20.4V~28.8V)	
Output points	8	8
Output type	Voltage type	Current type
Output signal	Disable、-10V~+10V、0V~10V、-5V~+5V, 0V~5V, 1V~5V (range adjustable, default is -10V~+10V)	Disable, 4mA~20mA, 0mA~20mA (The measurement range is adjustable, with the default value being 0mA~20mA)
Channel reaction time	400us / ch 400us / 8ch	
resolution	16 bits	
accuracy	±0.1% at 25℃, ±0.3% over the entire temperature range.	
Load impedance (voltage type)	⩾2kΩ (1kΩ accuracy: ±3‰ at 25℃, ±5‰ at full temperature)	-
Load impedance (current type)	-	⩽500Ω
The system must not be affected	In the event of a short circuit due to a fault in the ±15V power supply, the system's +5V power supply must not be affected.	
Output protection	Overload protection, open circuit protection, and short circuit protection (all with automatic recovery mechanisms).	
Potential isolation	There is no isolation between channels, isolation between channels and the backplane bus, and isolation between channels and the power supply voltage.	
Isolation and withstand voltage	500VDC	
Rated current consumption	100mA	
Power consumption	0.5W	
Clearing and retaining optional functions in non-OP state	support	
Channel Indicators	Green LED lights	

 Copyright © 2024-2025 Nanjing Solidot Electronic Technology Co., Ltd.

Analog output module		
Product Model	XB6S-A04V	XB6S-A04I
Bus input power supply rated voltage	5VDC (4.5V~5.5V)	
Bus input power supply rated current	≤80mA	
Field-side input voltage range	24VDC (20.4V~28.8V)	
Output points	4	4
Output type	Voltage type	Current type
Output signal	Disable、-10V~+10V、0V~10V、-5V~+5V, 0V~5V, 1V~5V (range adjustable, default is -10V~+10V)	Disable, 4mA~20mA, 0mA~20mA (The measurement range is adjustable, with the default value being 0mA~20mA)
Channel reaction time	200us / ch 200us / 4ch	
resolution	16 bits	
accuracy	±0.1% at 25℃, ±0.3% over the entire temperature range.	
Load impedance (voltage type)	⩾2kΩ (1kΩ accuracy: ±3‰ at 25℃, ±5‰ at full temperature)	-
Load impedance (current type)	-	⩽500Ω
The system must not be affected	In the event of a short circuit due to a fault in the ±15V power supply, the system's +5V power supply must not be affected.	
Output protection	Overload protection, open circuit protection, and short circuit protection (all with automatic recovery mechanisms).	
Potential isolation	There is no isolation between channels, isolation between channels and the backplane bus, and isolation between channels and the power supply voltage.	
Isolation and withstand voltage	500VDC	
Rated current consumption	80mA	
Power consumption	0.4W	
Clearing and retaining optional functions in non-OP state	support	
Channel Indicators	Green LED lights	

 Copyright © 2024-2025 Nanjing Solidot Electronic Technology Co., Ltd.

3.3.3.3 Analog current & voltage compatible input module parameters

Analog current & voltage compatible input module		
Product Model	XB6S-A80	XB6S-A40
Bus input power supply rated voltage	5VDC (4.5V~5.5V)	
Bus input power supply rated current	≤100mA	≤80mA
Input points	8	4
Input type	Current & Voltage Compatible	
Input signal	Disable, 0mA~20mA, 4mA~20mA, -20mA~+20mA, -10V~+10V, 0V~10V, -5V~+5V, 0V~5V, 1V~5V (range adjustable, default is 4mA~20mA)	
Input signal type	single-ended signal	
Channel reaction time	1ms / ch	
resolution	16 bits	
Sampling rate (full channel)	≤1ksps	
accuracy	±0.1% at 25℃, ±0.3% over the entire temperature range.	
Input filtering	support	
Smooth series	1~200	
Input impedance (voltage)	⩾100kΩ	
Input impedance (current)	≤100Ω	
Maximum allowable voltage (voltage) for the channel	30V	
Maximum allowable current (current) for the channel	30mA	
The system must not be affected	In the event of a short circuit due to a fault in the ±15V power supply, the system's +5V power supply must not be affected.	
Potential isolation	There is no isolation between channels, isolation between channels and the backplane bus, and isolation between channels and the power supply voltage.	
Input overload protection	Supports clamping protection (voltage) / Supports current limiting protection (current).	
Input protection	±30V (voltage) / ±30mA (current)	
Isolation and withstand voltage	500VDC	
Rated current consumption	100mA	80mA
Power consumption	0.5W	0.4W
Channel Indicators	Green LED lights	
Current/voltage input disconnection detection	support	

 Copyright © 2024-2025 Nanjing Solidot Electronic Technology Co., Ltd.

3.3.3.4 Analog current & voltage compatible output module parameters

Analog current & voltage compatible output module		
Product Model	XB6S-A08	XB6S-A04
Bus input power supply rated voltage	5VDC (4.5V~5.5V)	
Bus input power supply rated current	≤100mA	≤80mA
Field-side input voltage range	24VDC (20.4V~28.8V)	
Output points	8	4
Output type	Current & Voltage Compatible	
Output signal	Disable, 0mA~20mA, 4mA~20mA, -10V~+10V, 0V~10V, -5V~+5V, 0V~5V, 1V~5V (range adjustable, default is 4mA~20mA)	
Channel reaction time	400us / ch	
resolution	16 bits	
accuracy	±0.1% at 25℃, ±0.3% over the entire temperature range.	
Load impedance (voltage)	⩾2kΩ (Accuracy: ±1‰ at 25℃, ±3‰ at full temperature)	
Load impedance (current)	⩽600Ω	
The system must not be affected	In the event of a short circuit due to a fault in the ±15V power supply, the system's +5V power supply must not be affected.	
Output protection	Overload protection, open circuit protection, and short circuit protection (all with automatic recovery mechanisms).	
Potential isolation	There is no isolation between channels, isolation between channels and the backplane bus, and isolation between channels and the power supply voltage.	
Isolation and withstand voltage	500VDC	
Rated current consumption	100mA	80mA
Power consumption	0.5W	0.4W
Clearing and retaining optional functions in non-OP state	support	
Channel Indicators	Green LED lights	
On-site power supply testing	support	

 Copyright © 2024-2025 Nanjing Solidot Electronic Technology Co., Ltd.

3.3.3.5 General technical parameters

General technical parameters	
Specifications and dimensions	106.4 × 25.7 × 72.3mm
weight	8-channel AIO: 125g
	4-channel AIO: 105g
Operating temperature	-20℃~+60℃
Storage temperature	-40℃~+80℃
relative humidity	95%, no condensation
Altitude	≤2000m
Pollution level	Level 2
Protection level	IP20
Safety certification	UL certification, CE certification
Green certification	RoHS certification, REACH certification

Copyright © 2024-2025 Nanjing Solidot Electronic Technology Co., Ltd.

3.3.4 Analog voltage module parameters

3.3.4.1 Voltage Input Module Range Selection Table

Voltage input module range selection and code value range					
Range selection	Measuring range	Code value range	Voltage input calculation formula	Voltage output calculation formula	Code value mapping table
0	Disable indicates that the channel is not enabled.				
1 (default)	-10V~+10V	-32768~32767	D=(65535/20)*U	U=(D*20)/65535	See3.3.4.3 Voltage Input Module Code Value Table
2	0V~10V	0~32767	D=(32767/10)*U	U=(D*10)/32767	
3	-10V~+10V	-27648~27648	D=(55296/20)*U	U=(D*20)/55296	
4	0V~10V	0~27648	D=(27648/10)*U	U=(D*10)/27648	
5	-5V~+5V	-27648~27648	D=(55296/10)*U	U=(D*10)/55296	
6	0V~5V	0~27648	D=(27648/5)*U	U=(D*5)/27648	
7	1V~5V	0~27648	D=(27648/4)*U-6912	U=(D+6912)*4/27648	

Note: D represents code value, U represents voltage, and the default range of the analog voltage input module is 1: -10V~+10V (-32768~32767).

3.3.4.2 Voltage Output Module Range Selection Table

Voltage output module range selection and code value range					
Range selection	Measuring range	Code value range	Voltage input calculation formula	Voltage output calculation formula	Code value mapping table
0	Disable indicates that the channel is not enabled.				
1 (default)	-10V~+10V	-32768~32767	D=(65535/20)*U	U=(D*20)/65535	See3.3.4.4 Voltage Output Module Code Value Table
2	0V~10V	0~32767	D=(32767/10)*U	U=(D*10)/32767	
3	-10V~+10V	-27648~27648	D=(55296/20)*U	U=(D*20)/55296	
4	0V~10V	0~27648	D=(27648/10)*U	U=(D*10)/27648	
5	-5V~+5V	-27648~27648	D=(55296/10)*U	U=(D*10)/55296	
6	0V~5V	0~27648	D=(27648/5)*U	U=(D*5)/27648	
7	1V~5V	0~27648	D=(27648/4)*U-6912	U=(D+6912)*4/27648	

Note: D represents the code value, U represents the voltage, and the default range of the analog voltage output module is 1: -10V~+10V (-32768~32767).

 Copyright © 2024-2025 Nanjing Solidot Electronic Technology Co., Ltd.

3.3.4.3 Voltage Input Module Code Value Table

range / Voltage	-10V~+10V	0V~10V	-10V~+10V	0V~10V
	-32768~32767	0~32767	-27648~27648	0~27648
	code value	code value	code value	code value
-10.13	-	-	-27980	-
-10	-32768	-	-27648	-
-9	-29491	-	-24883	-
-8	-26214	-	-22118	-
-7	-22937	-	-19354	-
-6	-19661	-	-16589	-
-5	-16384	-	-13824	-
-4	-13107	-	-11059	-
-3	-9830	-	-8294	-
-2	-6554	-	-5530	-
-1	-3277	-	-2765	-
-0.13	-426	-384	-359	-332
-0.06	-197	-197	-166	-156
0	0	0	0	0
1	3277	3277	2765	2765
2	6554	6554	5530	5530
3	9830	9830	8294	8294
4	13107	13107	11059	11059
5	16384	16384	13824	13824
6	19661	19661	16589	16589
7	22937	22937	19354	19354
8	26214	26214	22118	22118
9	29491	29491	24883	24883
10	32767	32767	27648	27648
10.12	-	-	27980	27980
Code value formula	Code value =(65535/20)*Voltage	Code value =(32767/10)*Voltage	Code value =(55296/20)*Voltage	Code value =(27648/10)*Voltage
Voltage formula	Voltage =(Code value * 20) /65535	Voltage =(Code value * 10) /32767	Voltage =(Code value * 20) /55296	Voltage =(Code value * 10) /27648

Note: ① When the voltage input module range is selected as -10V~+10V (-32768~32767), overflow function is supported. That is, when the channel input voltage is greater than 10V, the maximum code value of 32767 will be displayed; when the input voltage is less than -10V, the minimum code value will be displayed.-32768.

②When the voltage input module's range is selected from 0V to 10V (0~32767), it supports underflow, overflow, and underflow alarm functions. Overflow occurs when the channel input range exceeds the range; within -0.13V to +10V, the calculated code value is displayed. Overflow occurs when

 Copyright © 2024-2025 Nanjing Solidot Electronic Technology Co., Ltd.

the channel input voltage is greater than 10V; the maximum code value of 32767 is displayed. When the input voltage is less than -0.13V, the minimum overflow code value is displayed.-384,Simultaneously issue an alarm..

③ Voltage input module range selection: -10V to +10V (-27648~27648It supports overshoot, overflow, and overflow alarm functions. Overshoot occurs when the channel input range exceeds the range, and the calculated code value is displayed within the range of -10.13V to +10.12V. Overflow occurs when the channel input voltage is greater than 10.12V, and the maximum overshoot code value of 27980 is displayed, along with an alarm; when the input voltage is less than -10.13V, the minimum overshoot code value is displayed.-27980, alarm triggered simultaneously..

④Voltage input module range selection 0V~10V (0~27648It supports overshoot, overflow, and overflow alarm functions. Overshoot occurs when the channel input range exceeds the measurement range, and the calculated code value is displayed within the range of -0.13V to +10.12V. Overflow occurs when the channel input voltage is greater than 10.12V, and the maximum overshoot code value of 27980 is displayed, along with an alarm; when the input voltage is less than -0.13V, the minimum overshoot code value is displayed.-332, alarm triggered simultaneously.

range / Voltage	**-5V~+5V**	**0V~5V**	**1V~5V**
	-27648~27648	**0~27648**	**0~27648**
	code value	**code value**	**code value**
-5.07	-27980	-	-
-5	-27648	-	-
-4	-22118	-	-
-3	-16588	-	-
-2	-11060	-	-
-1	-5530	-	-
-0.07	-332	-332	-
0	0	0	-
0.94	5198	5198	-345
1	5530	5530	0
2	11060	11060	6912
3	16588	16588	13824
4	22118	22118	20736
5	27648	27648	27648
5.06	27980	27980	27933
Code value formula	code value=(55296/10)*Voltage	code value=(27648/5)*Voltage	code value=(27648/4)*Voltage-6912
Voltage formula	Voltage=(code value*10)/55296	Voltage=(code value*5)/27648	Voltage=(code value+6912)*4/27648

Note:①When the voltage input module's range is selected as -5V to +5V (-27648 to 27648), it supports overshoot, overflow, and overflow alarm functions. Overshoot occurs when the channel input range exceeds the range; within -5.07V to +5.06V, a normal calculated code value is displayed. Overflow occurs when the channel input voltage is greater than 5.06V; the maximum overshoot code value of

 Copyright © 2024-2025 Nanjing Solidot Electronic Technology Co., Ltd.

27980 is displayed, and an alarm is triggered. When the input voltage is less than -5.07V, the minimum overshoot code value of -27980 is displayed, and an alarm is triggered.

② Voltage input module range selection: 0V~5V (0~27648It supports overshoot, overflow, and overflow alarm functions. Overshoot occurs when the channel input range exceeds the measurement range, and the calculated code value is displayed within the range of -0.07V to +5.06V. Overflow occurs when the channel input voltage is greater than 5.06V, and the maximum overshoot code value of 27980 is displayed, along with an alarm; when the input voltage is less than -0.07V, the minimum overshoot code value is displayed.-332, alarm triggered simultaneously.

③ Voltage input module range selection: 1V~5V (0~27648It supports overshoot, overflow, and overflow alarm functions. Overshoot occurs when the channel input range exceeds the measurement range; within the range of 0.94V to 5.06V, the normal calculated code value is displayed. Overflow occurs when the channel input voltage is greater than 5.06V; the maximum overshoot code value of 27933 is displayed, and an alarm is triggered. When the input voltage is less than 0.94V, the minimum overshoot code value is displayed.-345, alarm triggered simultaneously.

 Copyright © 2024-2025 Nanjing Solidot Electronic Technology Co., Ltd.

3.3.4.4 Voltage output module code value table

range / Voltage	-10V~+10V	0V~10V	-10V~+10V	0V~10V
	-32768~32767	0~32767	-27648~27648	0~27648
	code value	code value	code value	code value
-10	-32768	-	-27648	-
-9	-29491	-	-24883	-
-8	-26214	-	-22118	-
-7	-22937	-	-19354	-
-6	-19661	-	-16589	-
-5	-16384	-	-13824	-
-4	-13107	-	-11059	-
-3	-9830	-	-8294	-
-2	-6554	-	-5530	-
-1	-3277	-	-2765	-
0	0	0	0	0
1	3277	3277	2765	2765
2	6554	6554	5530	5530
3	9830	9830	8294	8294
4	13107	13107	11059	11059
5	16384	16384	13824	13824
6	19661	19661	16589	16589
7	22937	22937	19354	19354
8	26214	26214	22118	22118
9	29491	29491	24883	24883
10	32767	32767	27648	27648
Code value formula	Code value =(65535/20)*Voltage	Code value =(32767/10)*Voltage	Code value =(55296/20)*Voltage	Code value =(27648/10)*Voltage
Voltage formula	Voltage =(Code value * 20) /65535	Voltage =(Code value * 10) /32767	Voltage =(Code value * 20) /55296	Voltage =(Code value * 10) /27648

Note: ①The voltage output module supports overflow and overflow functions.When the voltage output module range is selected as -10V~+10V or 0V~10V, and the code value is set to be greater than the maximum code value corresponding to the range, the channel outputs 10V voltage.

When the voltage output module range is selected as -10V to +10V and the code value is set to be less than the minimum code value corresponding to the range, all channels output -10V voltage.

When the voltage output module range is selected as 0V~10V and the code value is set to be less than the minimum code value corresponding to the range, the channel outputs 0V voltage.

 Copyright © 2024-2025 Nanjing Solidot Electronic Technology Co., Ltd.

range / Voltage	-5V~+5V	0V~5V	1V~5V
	-27648~27648	0~27648	0~27648
	code value	code value	code value
-5	-27648	-	-
-4	-22118	-	-
-3	-16588	-	-
-2	-11060	-	-
-1	-5530	-	-
0	0	0	-
1	5530	5530	0
2	11060	11060	6912
3	16588	16588	13824
4	22118	22118	20736
5	27648	27648	27648
Code value formula	code value=(55296/10)*Voltage	code value=(27648/5)*Voltage	code value=(27648/4)*Voltage-6912
Voltage formula	Voltage=(code value*10)/55296	Voltage=(code value*5)/27648	Voltage=(code value+6912)*4/27648

Note:① The voltage output module supports overflow and overflow functions.When the voltage output module range is selected as -5V~+5V/0V~5V/1V~5V and the code value is set to be greater than the maximum code value corresponding to the range, the channel outputs 5V voltage.

When the voltage output module range is selected as -5V to +5V and the code value is set to be less than the minimum code value corresponding to the range, all channels output -5V voltage.

When the voltage output module range is selected as 0V~5V and the code value is set to be less than the minimum code value corresponding to the range, all channels output 0V voltage.

When the voltage output module range is selected as 1V~5V and the code value is set to be less than the minimum code value corresponding to the range, the channel outputs 1V voltage.

 Copyright © 2024-2025 Nanjing Solidot Electronic Technology Co., Ltd.

3.3.5 Analog current module parameters

3.3.5.1 Current input module range selection table

Current input module range selection and code value range					
Range selection	Measuring range	Code value range	Current input calculation formula	Current output calculation formula	Code value mapping table
0	Disable indicates that the channel is not enabled.				
1	4mA~20mA	0~65535	D=(65535/16)*I-16384	I=(D+16384)*16/65535	See3.3.5.3 Current Input Module Code Value Table
2 (default)	0mA~20mA	0~65535	D=(65535/20)*I	I=(D*20)/65535	
3	4mA~20mA	0~27648	D=(27648/16)*I-6912	I=((D+6912)*16)/27648	
4	0mA~20mA	0~27648	D=(27648/20)*I	I=(D*20)/27648	
5	-20mA~+20mA	0~65535	D=(65535/40)*(I+20)	I=(D*40)/65535-20	

Note: D represents code value, I represents current, and the default range of the analog current input module is 2: 0mA~20mA (0~65535).

Range 5: -20mA~+20mA (0~65535) is unique to the current input differential signal module.

3.3.5.2 Current output module range selection table

Current output module range selection and code value range					
Range selection	Measuring range	Code value range	Current input calculation formula	Current output calculation formula	Code value mapping table
0	Disable indicates that the channel is not enabled.				
1	4mA~20mA	0~65535	D=(65535/16*I)-16384	I=(D+16384)*16/65535	See3.3.5.4 Current Output Module Code Value Table
2 (default)	0mA~20mA	0~65535	D=(65535/20)*I	I=(D*20)/65535	
3	4mA~20mA	0~27648	D=(27648/16)*I-6912	I=((D+6912)*16)/27648	
4	0mA~20mA	0~27648	D=(27648/20)*I	I=(D*20)/27648	

Note: D represents code value, I represents current, and the default range of the analog current output module is 2: 0mA~20mA (0~65535).

 Copyright © 2024-2025 Nanjing Solidot Electronic Technology Co., Ltd.

3.3.5.3 Current Input Module Code Value Table

range / Current	4mA~20mA	0mA~20mA	4mA~20mA	0mA~20mA	-20mA~+20mA
	0~65535	0~65535	0~27648	0~27648	0~65535
	code value	code value	code value	code value	code value
-20	-	-	-	-	0
-15	-	-	-	-	8192
-10	-	-	-	-	16384
-9	-	-	-	-	18022
-8	-	-	-	-	19661
-7	-	-	-	-	21299
-6	-	-	-	-	22937
-5	-	-	-	-	24576
-4	-	-	-	-	26214
-3	-	-	-	-	27852
-2	-	-	-	-	29491
-1	-	-	-	-	31129
0	-	0	-	0	32768
1	-	3277	-	1382	34406
2	-	6554	-	2765	36044
3	-	9830	-	4147	37683
4	0	13107	0	5530	39321
5	4096	16384	1728	6912	40959
6	8192	19661	3456	8294	42598
7	12288	22937	5184	9677	44236
8	16384	26214	6912	11059	45875
9	20479	29491	8640	12442	47513
10	24575	32768	10368	13824	49151
11	28671	36044	12096	15206	50790
12	32767	39321	13824	16589	52428
13	36863	42598	15552	17971	54066
14	40959	45875	17280	19354	55705
15	45055	49151	19008	20736	57343
16	49151	52428	20736	22118	58982
17	53247	55705	22464	23501	60620
18	57343	58982	24192	24883	62258
19	61439	62258	25920	26266	63897
20	65535	65535	27648	27648	65535
20.19	-	-	28034	27917	-
20.24	-	-	28085	27986	-
Code value formula	Code value = 65535/16 * current - 16384	Code value = (65535/20) * current	Code value = (27648/16) * current - 6912	Code value = (27648/20) * current	Code value =(65535/40)*(current+20)

Note: Range 5: -20mA~+20mA (0~65535) is unique to the current input differential signal module.

 Copyright © 2024-2025 Nanjing Solidot Electronic Technology Co., Ltd.

① When the current input module range is selected from 4mA to 20mA (0 to 65535), it supports overflow and overflow alarm functions. That is, when the channel input current is greater than 20.03mA, the maximum code value 65535 will be displayed and an alarm will be triggered. When the input channel input current is less than 4mA, the minimum code value will be displayed.0.

②When the current input module's range is selected from 0mA to 20mA (0 to 65535), it supports overflow and overflow alarm functions. That is, when the channel input current is greater than 20.03mA, the maximum code value 65535 will be displayed, and an alarm will be triggered simultaneously.When the input current is less than 0mA, the minimum code value 0 is displayed.

③When the current input module's range is selected from 4mA to 20mA (0 to 27648), it supports overshoot, overflow, and overflow alarm functions. Overshoot occurs when the channel input range exceeds the range; within the range of 4mA to 20.24mA, the normal calculated code value is displayed. Overflow occurs when the channel input current exceeds 20.24mA, and the maximum overshoot code value is displayed.28085Simultaneously, an alarm is triggered. Underflow occurs when the input current to the input channel is less than 4mA, and the minimum overshoot code value of 0 is displayed.

④When the current input module's range is selected from 0mA to 20mA (0~27648), it supports overshoot, overflow, and overflow alarm functions. Overshoot occurs when the channel input range exceeds the range; within the range of 0mA to 20.24mA, the normal calculated code value is displayed. Overflow occurs when the channel input current exceeds 20.24mA, and the maximum overshoot code value is displayed.27986Simultaneously, an alarm is triggered. Underflow occurs when the input current to the input channel is less than 0mA, and the minimum overshoot code value of 0 is displayed.

⑤When the current input module's range is selected from -20mA to +20mA (0 to 65535), it supports overflow and overflow alarm functions. That is, when the channel input current is greater than 20mA, the maximum code value 65535 will be displayed, and an alarm will be triggered simultaneously.Input channel input less than-20mAWhen the current is applied, the minimum code value of 0 is always displayed.

 Copyright © 2024-2025 Nanjing Solidot Electronic Technology Co., Ltd.

3.3.5.4 Current output module code value table

range / Current	4mA~20mA	0mA~20mA	4mA~20mA	0mA~20mA
	0~65535	0~65535	0~27648	0~27648
	code value	code value	code value	code value
0	-	0	-	0
1	-	3277	-	1382
2	-	6554	-	2765
3	-	9830	-	4147
4	0	13107	0	5530
5	4096	16384	1728	6912
6	8192	19661	3456	8294
7	12288	22937	5184	9677
8	16384	26214	6912	11059
9	20479	29491	8640	12442
10	24575	32768	10368	13824
11	28671	36044	12096	15206
12	32767	39321	13824	16589
13	36863	42598	15552	17971
14	40959	45875	17280	19354
15	45055	49151	19008	20736
16	49151	52428	20736	22118
17	53247	55705	22464	23501
18	57343	58982	24192	24883
19	61439	62258	25920	26266
20	65535	65535	27648	27648
22.81	-	-	32511	31538
23.52	-	-	-	32511
Code value formula	Code value = 65535/16 * current - 16384	Code value = (65535/20) * current	Code value = (27648/16) * current - 6912	Code value = (27648/20) * current

Note: ① When the current output module range is selected as 4mA~20mA (0~27648) or 0mA~20mA (0~27648), it supports overflow, overshoot, and overflow alarm functions. That is, when the current output module range is selected as 4mA~20mA (0~27648) and the code value is set to greater than...32511At the same time, all channels output 22.81mA current and trigger an alarm. The current output module range is 0mA~20mA (0~27648), and the code value is set to be greater than...32511At that time, all channels output 23.52mA current and simultaneously trigger an alarm.

 Copyright © 2024-2025 Nanjing Solidot Electronic Technology Co., Ltd.

3.3.6 Analog Current & Voltage Compatible Module Parameters

3.3.6.1 Current & Voltage Compatible Input Module Range Selection Table

Current & Voltage Compatible Input Module Range Selection and Code Value Range					
Range selection	Measuring range	Code value range	Current/Voltage Input Calculation Formula	Current/Voltage Output Calculation Formula	Code value mapping table
0	Disable indicates that the channel is not enabled.				
1	0mA~20mA	0~27648	D=(27648/20)*I	I=(D*20)/27648	See3.3.6.3 Current & Voltage Compatible Input Module Code Value Table
2 (default)	4mA~20mA	0~27648	D=(27648/16)*I-6912	I=((D+6912)*16)/27648	
3	-20mA~+20mA	-27648~27648	D=(55296/40)*I	I=(D*40)/55296	
4	-10V~+10V	-27648~27648	D=(55296/20)*U	U=(D*20)/55296	
5	-10V~+10V	-32768~32767	D=(65535/20)*U	U=(D*20)/65535	
6	0V~10V	0~27648	D=(27648/10)*U	U=(D*10)/27648	
7	0V~10V	0~32767	D=(32767/10)*U	U=(D*10)/32767	
8	-5V~+5V	-27648~27648	D=(55296/10)*U	U=(D*10)/55296	
9	-5V~+5V	-32768~32767	D=(65535/10)*U	U=(D*10)/65535	
10	0V~5V	0~27648	D=(27648/5)*U	U=(D*5)/27648	
11	0V~5V	0~32767	D=(32767/5)*U	U=(D*5)/32767	
12	1V~5V	0~27648	D=(27648/4)*U-6912	U=(D+6912)*4/27648	

3.3.6.2 Current & Voltage Compatible Output Module Range Selection Table

Current & Voltage Compatible Output Module Range Selection and Code Value Range					
Range selection	Measuring range	Code value range	Current/Voltage Input Calculation Formula	Current/Voltage Output Calculation Formula	Code value mapping table
0	Disable indicates that the channel is not enabled.				
1	0mA~20mA	0~27648	D=(27648/20)*I	I=(D*20)/27648	See3.3.6.4 Current & Voltage Compatible Output Module Code Value Table
2 (default)	4mA~20mA	0~27648	D=(27648/16)*I-6912	I=((D+6912)*16)/27648	
3	-10V~+10V	-27648~27648	D=(55296/20)*U	U=(D*20)/55296	
4	-10V~+10V	-32768~32767	D=(65535/20)*U	U=(D*20)/65535	
5	0V~10V	0~27648	D=(27648/10)*U	U=(D*10)/27648	
6	0V~10V	0~32767	D=(32767/10)*U	U=(D*10)/32767	
7	-5V~+5V	-27648~27648	D=(55296/10)*U	U=(D*10)/55296	
8	-5V~+5V	-32768~32767	D=(65535/10)*U	U=(D*10)/65535	
9	0V~5V	0~27648	D=(27648/5)*U	U=(D*5)/27648	
10	0V~5V	0~32767	D=(32767/5)*U	U=(D*5)/32767	
11	1V~5V	0~27648	D=(27648/4)*U-6912	U=(D+6912)*4/27648	

Copyright © 2024-2025 Nanjing Solidot Electronic Technology Co., Ltd.

3.3.6.3 Current & Voltage Compatible Input Module Code Value Table

range / Current	0mA~20mA	4mA~20mA	-20mA~+20mA
	0~27648	0~27648	-27648~27648
	code value	code value	code value
-23.52	-	-	-32512
-20	-	-	-27648
-15	-	-	-20736
-10	-	-	-13824
-5	-	-	-6912
-3.52	-4864	-	-4864
-1	-1382	-	-1382
0	0	-	0
1	1382	-	1382
1.185	1638	-4864	1638
2	2765	-3456	2765
3	4147	-1728	4147
4	5530	0	5530
5	6912	1728	6912
6	8294	3456	8294
7	9677	5184	9677
8	11059	6912	11059
9	12442	8640	12442
10	13824	10368	13824
11	15206	12096	15206
12	16589	13824	16589
13	17971	15552	17971
14	19354	17280	19354
15	20736	19008	20736
16	22118	20736	22118
17	23501	22464	23501
18	24883	24192	24883
19	26266	25920	26266
20	27648	27648	27648
22.81	31538	32511	31533
23.52	32511	-	32511
Code value formula	Code value = (27648/20) * current	Code value = (27648/16) * current - 6912	Code value = (55296/40) * current

Note: ① When the current & voltage compatible input module range is selected from 0mA to 20mA (0~27648), it supports overshoot ±3.52mA and supports overflow and overflow alarm functions. Overshoot occurs when the channel input range exceeds the range.-3.52mA~23.52The value displayed within mA is the normal calculated code value. Overflow or overflow is displayed as -32768/32767.

② The current & voltage compatible input module supports overshoot ±2.81mA when the range selection is 4mA~20mA (0~27648), and supports overflow and overflow alarm functions. Overshoot

 Copyright © 2024-2025 Nanjing Solidot Electronic Technology Co., Ltd.

occurs when the channel input range exceeds the range.1.185mA~2The normal calculation code value is displayed within 2.81mA. Overflow and overflow are displayed as -32768/32767.

③ The current & voltage compatible input module supports overshoot ±3.52mA when the range selection is -20mA to 20mA (-27648 to 27648), and supports overflow and overflow alarm functions. Overshoot occurs when the channel input range exceeds the range.-23.52mA~23.52The value displayed within mA is the normal calculated code value. Overflow or overflow is displayed as -32768/32767.

range / Voltage	-10V~+10V	-10V~+10V	0V~10V	0V~10V
	-27648~27648	-32768~32767	0~27648	0~32767
	code value	code value	code value	code value
-11.759	-31512	-	-	-
-10	-27648	-32768	-	-
-9	-24883	-29491	-	-
-8	-22118	-26214	-	-
-7	-19354	-22937	-	-
-6	-16589	-19661	-	-
-5	-13824	-16384	-	-
-4	-11059	-13107	-	-
-3	-8294	-9830	-	-
-2	-5530	-6554	-	-
-1.759	-4864	-5764	-4864	-
-1	-2765	-3277	-2765	-
0	0	0	0	0
1	2765	3277	2765	3277
2	5530	6554	5530	6554
3	8294	9830	8294	9830
4	11059	13107	11059	13107
5	13824	16384	13824	16384
6	16589	19661	16589	19661
7	19354	22937	19354	22937
8	22118	26214	22118	26214
9	24883	29491	24883	29491
10	27648	32767	27648	32767
11.759	31511	-	31511	-
Code value formula	Code value =(55296/20)*Voltage	Code value =(65535/20)*Voltage	Code value =(27648/10)*Voltage	Code value =(32767/10)*Voltage
Voltage formula	Voltage =(Code value * 20) /55296	Voltage =(Code value * 20) /65535	Voltage =(Code value * 10) /27648	Voltage =(Code value * 10) /32767

Note: ① The current & voltage compatible input module supports overshoot ±1.759V when the range is selected as -10V~+10V (-27648~27648), and supports overflow and overflow alarm functions.

 Copyright © 2024-2025 Nanjing Solidot Electronic Technology Co., Ltd.

Overshoot occurs when the channel input range exceeds the range.-11.759V~1The display shows the normal calculation code value within 1.759V. Overflow or overflow will display as -32768/32767.

② The current & voltage compatible input module does not support overshoot when the range selection is -10V~+10V (-32768~32767), but supports overflow and overflow alarm functions. Overflow is displayed as -32768/32767.

③ The current & voltage compatible input module supports overshoot ±1.759V when the range selection is 0V~10V (0~27648), and supports overflow and overflow alarm functions. Overshoot occurs when the channel input range exceeds the range.-1.759V~1The display shows the normal calculation code value within 1.759V. Overflow or overflow will display as -32768/32767.

④ The current & voltage compatible input module does not support overshoot when the range is selected from 0V to 10V (0~32767), but supports overflow and overflow alarm functions. Overflow is displayed as 0/32767.

range / Voltage	-5V~+5V	-5V~+5V	0V~5V	0V~5V	1V~5V
	-27648~27648	-32768~32767	0~27648	0~32767	0~27648
	code value	code value	code value	code value	code value
-5.879	-32512	-	-	-	-
-5	-27648	-32768	-	-	-
-4	-22118	-26214	-	-	-
-3	-16588	-19661	-	-	-
-2	-11060	-13107	-	-	-
-1	-5530	-6554	-	-	-
-0.879	-4864	-5761	-4864	-	-
0	0	0	0	0	-
0.296	1637	1940	1637	1940	-4864
1	5530	6554	5530	6554	0
2	11060	13107	11060	13107	6912
3	16588	19661	16588	19661	13824
4	22118	26214	22118	26214	20736
5	27648	32767	27648	32767	27648
5.704	31541	-	31541	-	32511
5.879	32511	-	32511	-	-
Code value formula	code value=(55296/10) *Voltage	code value=(65535/10)* Voltage	code value=(27648/5) *Voltage	code value=(32767/5) *Voltage	code value=(27648/4) *Voltage-6912
Voltage formula	Voltage=(code value*10)/55296	Voltage=(code value*10)/ 65535	Voltage=(code value*5) /27648	Voltage=(code value*5)/ 32767	Voltage=(code value+6912)*4/27648

Note: ① When the current & voltage compatible input module range is selected as -5V~+5V (-27648~27648), it supports overshoot ±0.879V and supports overflow and overflow alarm functions. Overshoot occurs when the channel input range exceeds the range.-5.879V~5The calculated code value is displayed within 0.879V. Overflow or overflow is displayed as -32768/32767.

 Copyright © 2024-2025 Nanjing Solidot Electronic Technology Co., Ltd.

② The current & voltage compatible input module does not support overshoot when the range is selected as -5V~+5V (-32768~32767), but supports overflow and overflow alarm functions. Overflow is displayed as -32768/32767.

③ The current & voltage compatible input module supports overshoot ±0.879V when the range is selected from 0V to 5V (0~27648), and supports overflow and overflow alarm functions. Overshoot occurs when the channel input range exceeds the range.-0.879The calculated code value is displayed within the range of V to 5.879V. Overflow or overflow is displayed as -32768/32767.

④ The current & voltage compatible input module does not support overshoot when the range is selected from 0V to 5V (0 to 32767), but supports overflow and overflow alarm functions. Overflow is displayed as 0/32767.

⑤ The current & voltage compatible input module supports overshoot ±0.704V when the range is selected from 1V to 5V (0 to 27648), and supports overflow and overshoot alarm functions. Overshoot occurs when the channel input range exceeds the range.0.296The calculated code value is displayed within the range of V to 5.704V. Overflow or overflow is displayed as -32768/32767.

 Copyright © 2024-2025 Nanjing Solidot Electronic Technology Co., Ltd.

3.3.6.4 Current & Voltage Compatible Output Module Code Value Table

range / Current	0mA~20mA	4mA~20mA
	0~27648	0~27648
	code value	code value
0	0	-
1	1382	-
2	2765	-
3	4147	-
4	5530	0
5	6912	1728
6	8294	3456
7	9677	5184
8	11059	6912
9	12442	8640
10	13824	10368
11	15206	12096
12	16589	13824
13	17971	15552
14	19354	17280
15	20736	19008
16	22118	20736
17	23501	22464
18	24883	24192
19	26266	25920
20	27648	27648
Code value formula	Code value = (27648/20) * current	Code value = (27648/16) * current - 6912
Current formula	Current = ((code value * 20) / 27648	Current = ((Code value + 6912) * 16) / 27648

Note: Code values set outside the range for current & voltage compatible output modules will not take effect. For analog output modules, if the preset value of the cleared and retained parameters exceeds the code value range, the preset value will not take effect, and the previous valid value will be maintained.

 Copyright © 2024-2025 Nanjing Solidot Electronic Technology Co., Ltd.

range / Voltage	-10V~+10V	-10V~+10V	0V~10V	0V~10V
	-27648~27648	-32768~32767	0~27648	0~32767
	code value	code value	code value	code value
-10	-27648	-32768	-	-
-9	-24883	-29491	-	-
-8	-22118	-26214	-	-
-7	-19354	-22937	-	-
-6	-16589	-19661	-	-
-5	-13824	-16384	-	-
-4	-11059	-13107	-	-
-3	-8294	-9830	-	-
-2	-5530	-6554	-	-
-1	-2765	-3277	-	-
0	0	0	0	0
1	2765	3277	2765	3277
2	5530	6554	5530	6554
3	8294	9830	8294	9830
4	11059	13107	11059	13107
5	13824	16384	13824	16384
6	16589	19661	16589	19661
7	19354	22937	19354	22937
8	22118	26214	22118	26214
9	24883	29491	24883	29491
10	27648	32767	27648	32767
Code value formula	Code value =(55296/20)*Voltage	Code value =(65535/20)*Voltage	Code value =(27648/10)*Voltage	Code value =(32767/10)*Voltage
Voltage formula	Voltage =(Code value * 20) /55296	Voltage =(Code value * 20) /65535	Voltage =(Code value * 10) /27648	Voltage =(Code value * 10) /32767

Note: Code values set outside the range for current & voltage compatible output modules will not take effect. For analog output modules, if the preset value of the cleared and retained parameters exceeds the code value range, the preset value will not take effect, and the previous valid value will be maintained.

 Copyright © 2024-2025 Nanjing Solidot Electronic Technology Co., Ltd.

range / Voltage	-5V~+5V	-5V~+5V	0V~5V	0V~5V	1V~5V
	-27648~27648	-32768~32767	0~27648	0~32767	0~27648
	code value	code value	code value	code value	code value
-5	-27648	-32768	-	-	-
-4	-22118	-26214	-	-	-
-3	-16588	-19661	-	-	-
-2	-11060	-13107	-	-	-
-1	-5530	-6554	-	-	-
0	0	0	0	0	-
1	5530	6554	5530	6554	0
2	11060	13107	11060	13107	6912
3	16588	19661	16588	19661	13824
4	22118	26214	22118	26214	20736
5	27648	32767	27648	32767	27648
Code value formula	code value=(55296/10) *Voltage	code value=(65535/10)* Voltage	code value=(27648/5) *Voltage	code value=(32767/5) *Voltage	code value=(27648/4) *Voltage-6912
Voltage formula	Voltage=(code value*10)/55296	Voltage=(code value*10)/ 65535	Voltage=(code value*5) /27648	Voltage=(code value*5)/ 32767	Voltage=(code value+6912)*4/27648

Note: Code values set outside the range for current & voltage compatible output modules will not take effect. For analog output modules, if the preset value of the cleared and retained parameters exceeds the code value range, the preset value will not take effect, and the previous valid value will be maintained.

 Copyright © 2024-2025 Nanjing Solidot Electronic Technology Co., Ltd.

3.3.7 Wiring diagram

3.3.7.1 XB6S-A80VD

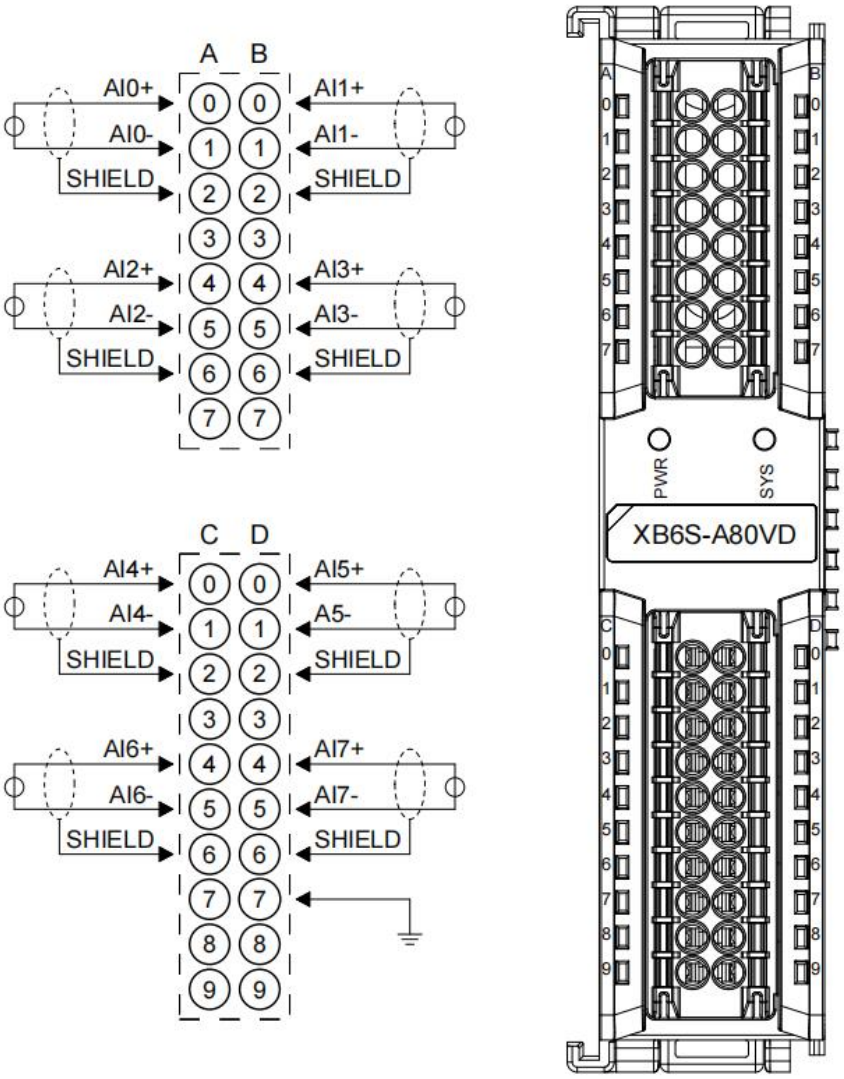

*All SHIELD internal conduction

*It is recommended to use shielded twisted-pair cable, connect the shield to the SHIELD port, and ground it reliably.

 Copyright © 2024-2025 Nanjing Solidot Electronic Technology Co., Ltd.

3.3.7.2 XB6S-A80V

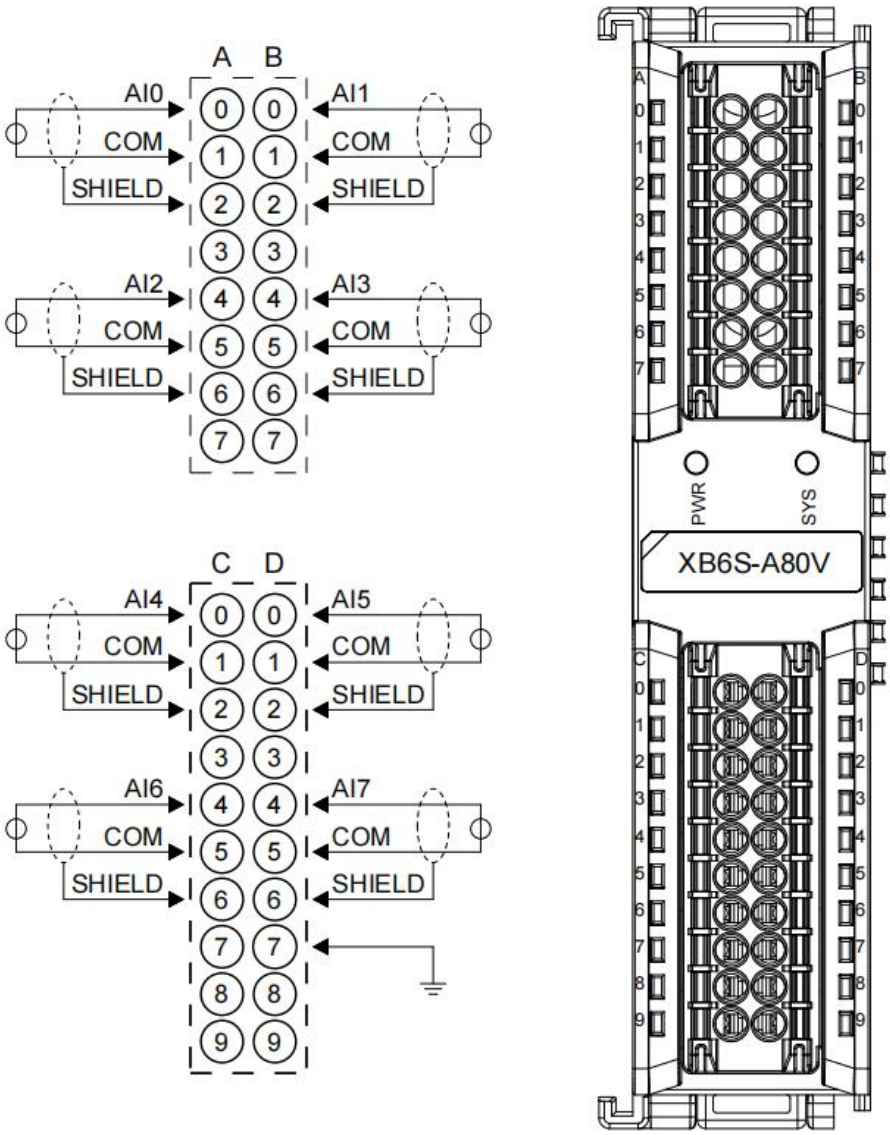

*COM internal conduction, SHIELD internal conduction

*All channel loads must originate from the same source.

*Shielded twisted-pair cables are recommended for signal cables.

 Copyright © 2024-2025 Nanjing Solidot Electronic Technology Co., Ltd.

3.3.7.3 XB6S-A40VD

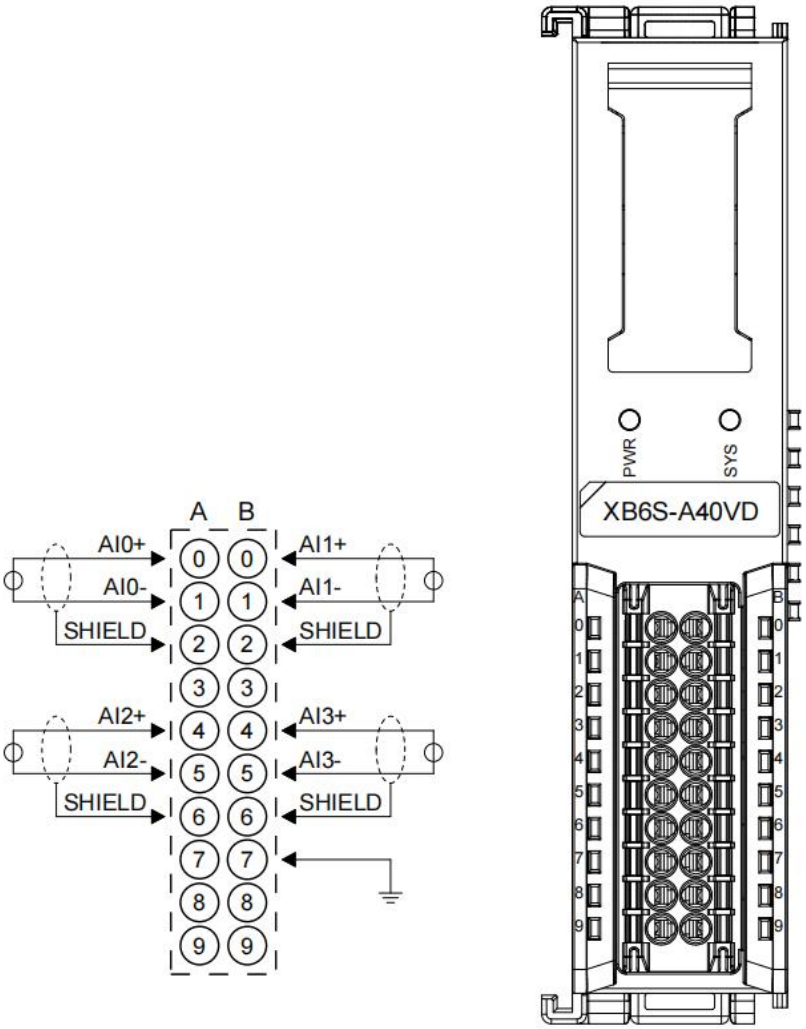

*All SHIELD internal conduction

*It is recommended to use shielded twisted-pair cable, connect the shield to the SHIELD port, and ground it reliably.

 Copyright © 2024-2025 Nanjing Solidot Electronic Technology Co., Ltd.

3.3.7.4 XB6S-A40V

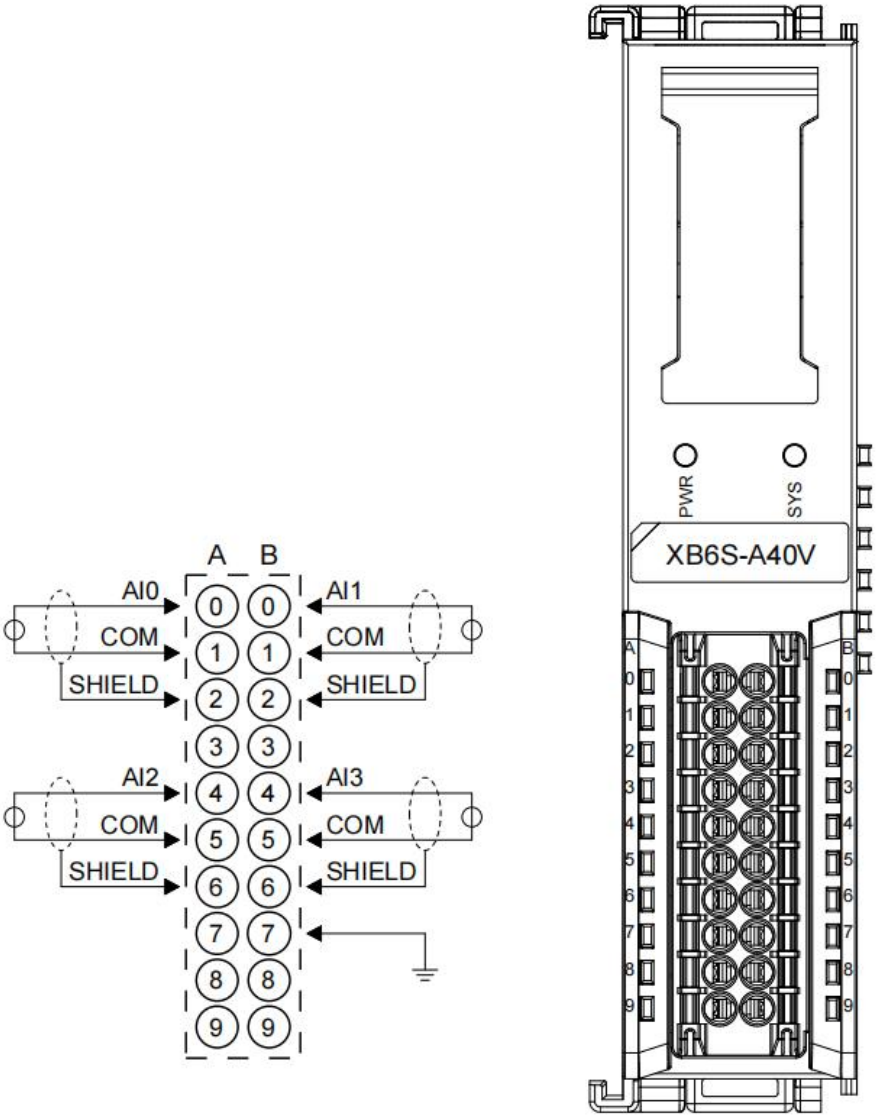

*COM internal conduction, SHIELD internal conduction

*All channel loads must originate from the same source.

*Shielded twisted-pair cables are recommended for signal cables.

 Copyright © 2024-2025 Nanjing Solidot Electronic Technology Co., Ltd.

3.3.7.5 XB6S-A80ID

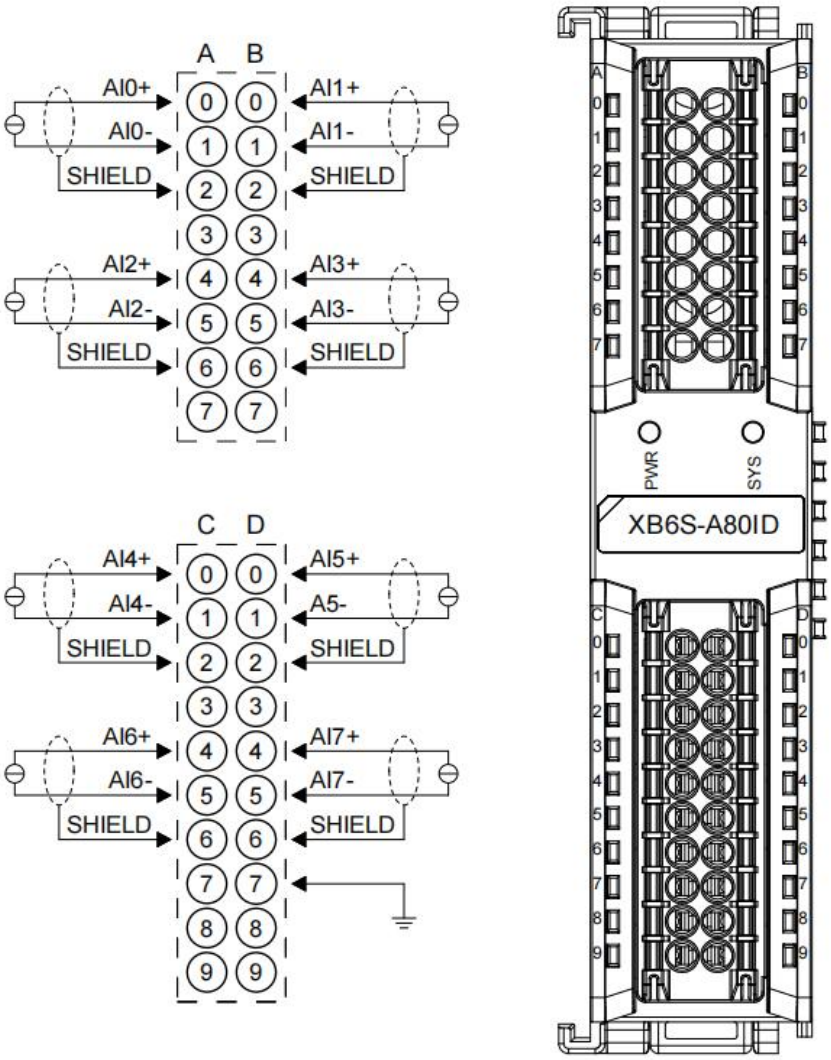

*All SHIELD internal conduction

*It is recommended to use shielded twisted-pair cable, connect the shield to the SHIELD port, and ground it reliably.

 Copyright © 2024-2025 Nanjing Solidot Electronic Technology Co., Ltd.

3.3.7.6 XB6S-A80I

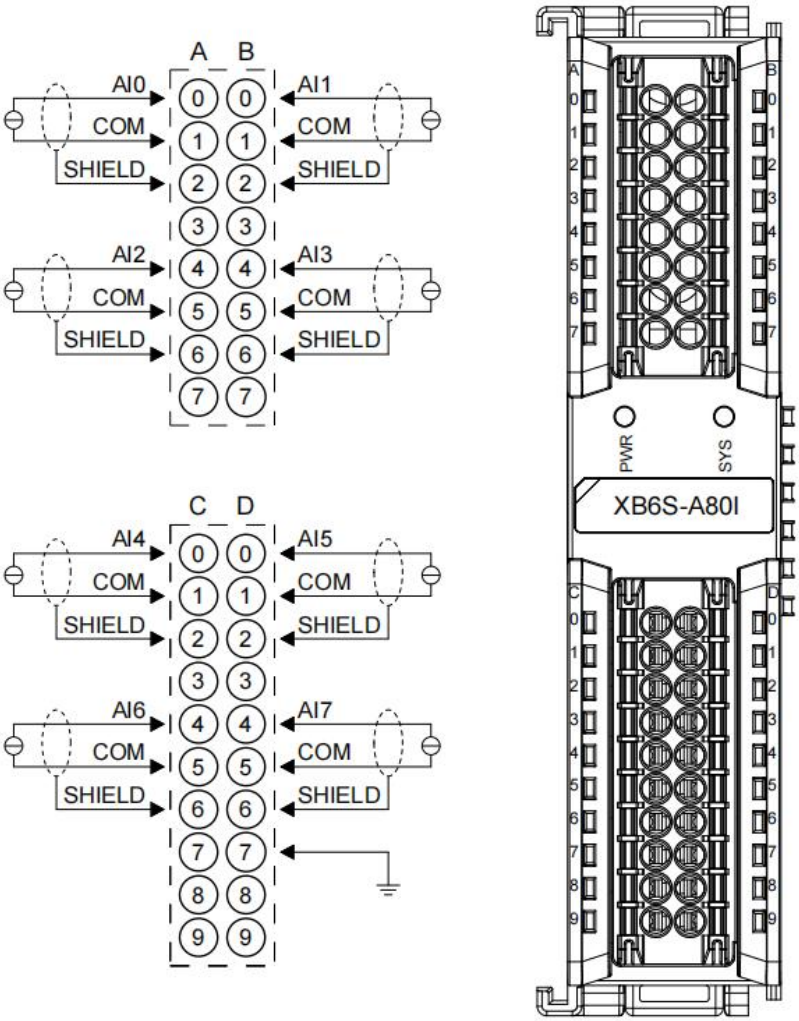

*COM internal conduction, SHIELD internal conduction

*All channel loads must originate from the same source.

*Shielded twisted-pair cables are recommended for signal cables.

 Copyright © 2024-2025 Nanjing Solidot Electronic Technology Co., Ltd.

3.3.7.7 XB6S-A40ID

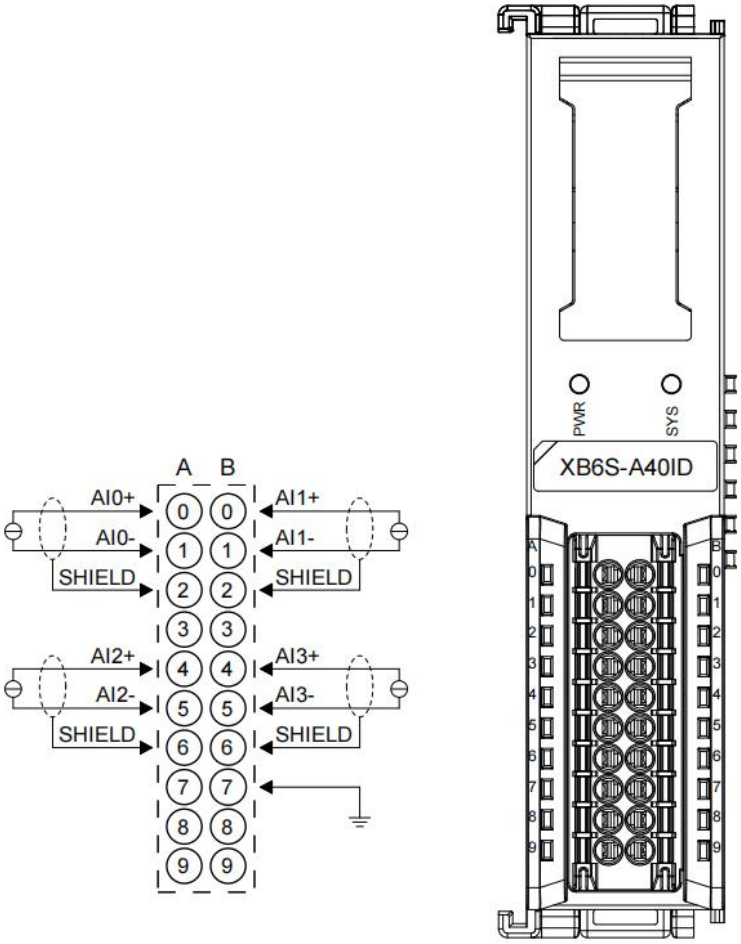

*All SHIELD internal conduction

*It is recommended to use shielded twisted-pair cable, connect the shield to the SHIELD port, and ground it reliably.

 Copyright © 2024-2025 Nanjing Solidot Electronic Technology Co., Ltd.

3.3.7.8 XB6S-A40I

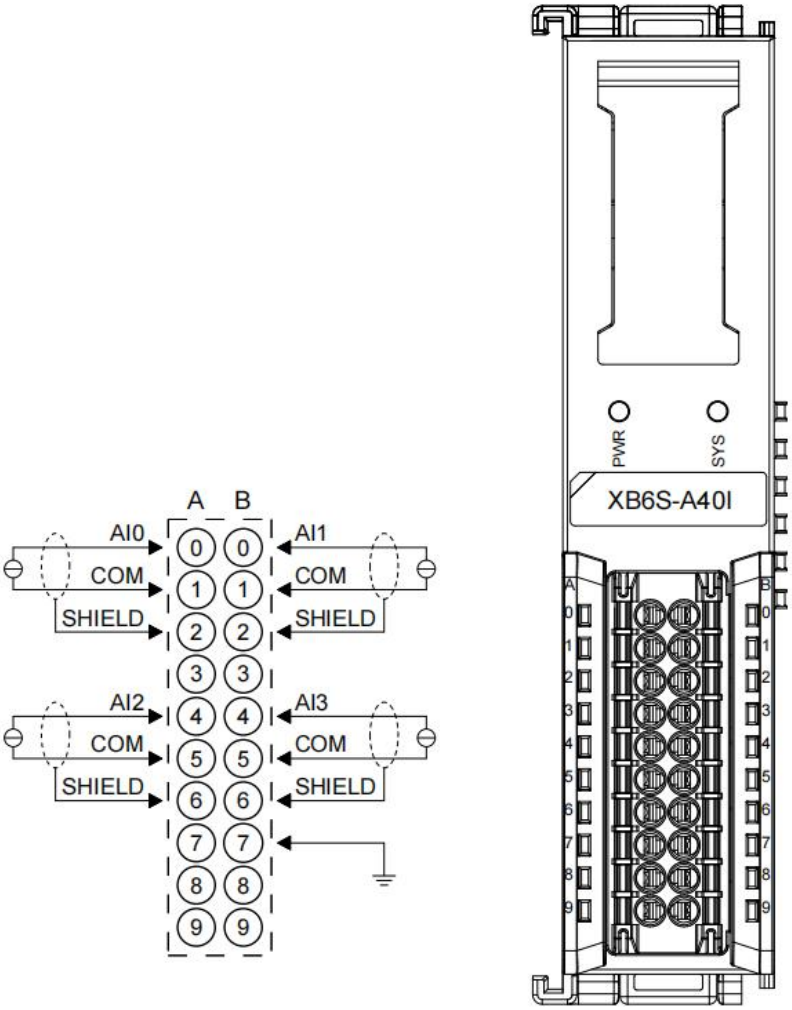

*COM internal conduction, SHIELD internal conduction

*All channel loads must originate from the same source.

*Shielded twisted-pair cables are recommended for signal cables.

 Copyright © 2024-2025 Nanjing Solidot Electronic Technology Co., Ltd.

3.3.7.9 XB6S-A80

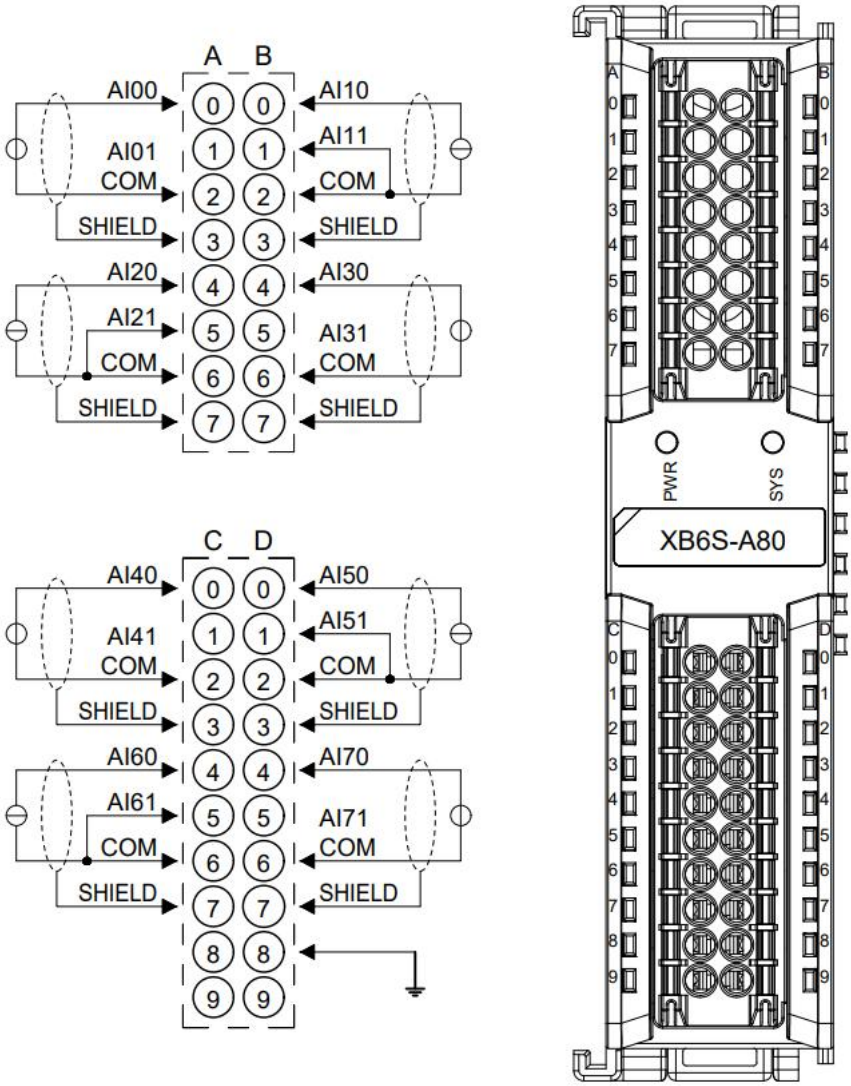

*COM internal conduction, SHIELD internal conduction

*For current-mode applications, AIx1 and COM need to be shorted externally.

*All channel loads must originate from the same source.

*Shielded twisted-pair cables are recommended for signal cables.

 Copyright © 2024-2025 Nanjing Solidot Electronic Technology Co., Ltd.

3.3.7.10 XB6S-A40

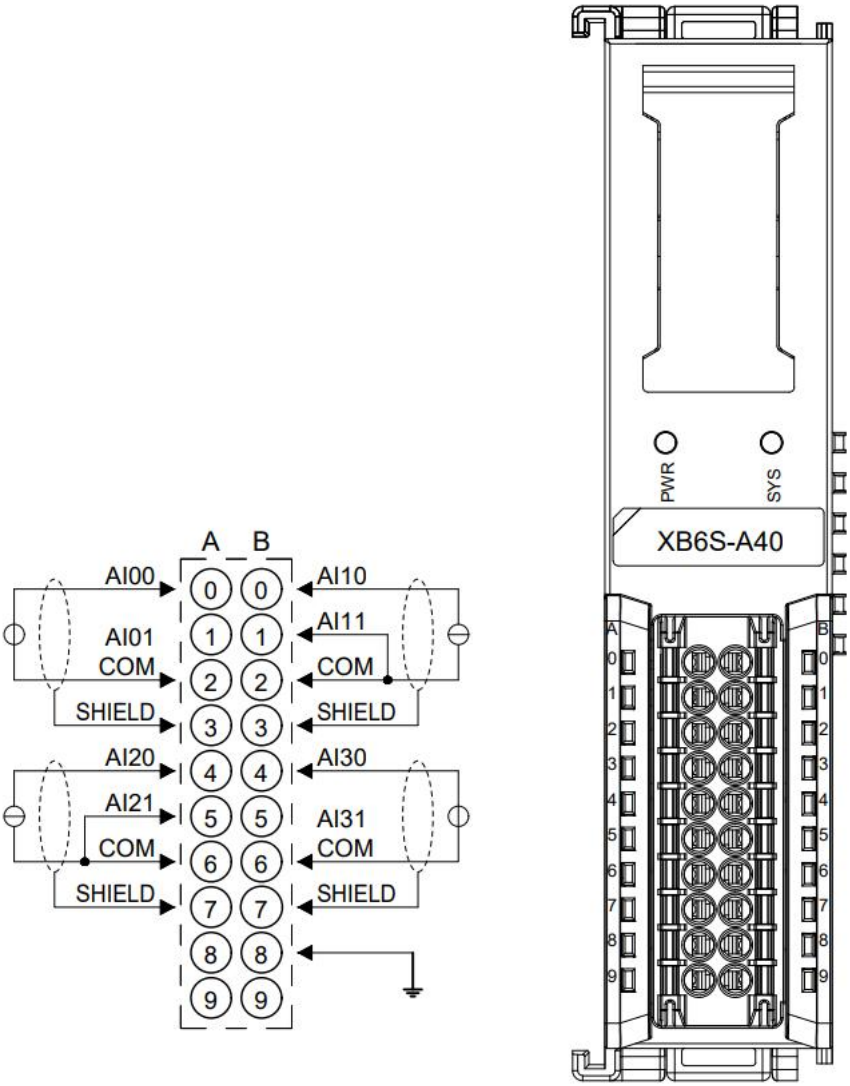

*COM internal conduction, SHIELD internal conduction

*For current-mode applications, AIx1 and COM need to be shorted externally.

*All channel loads must originate from the same source.

*Shielded twisted-pair cables are recommended for signal cables.

 Copyright © 2024-2025 Nanjing Solidot Electronic Technology Co., Ltd.

3.3.7.11 XB6S-A08V

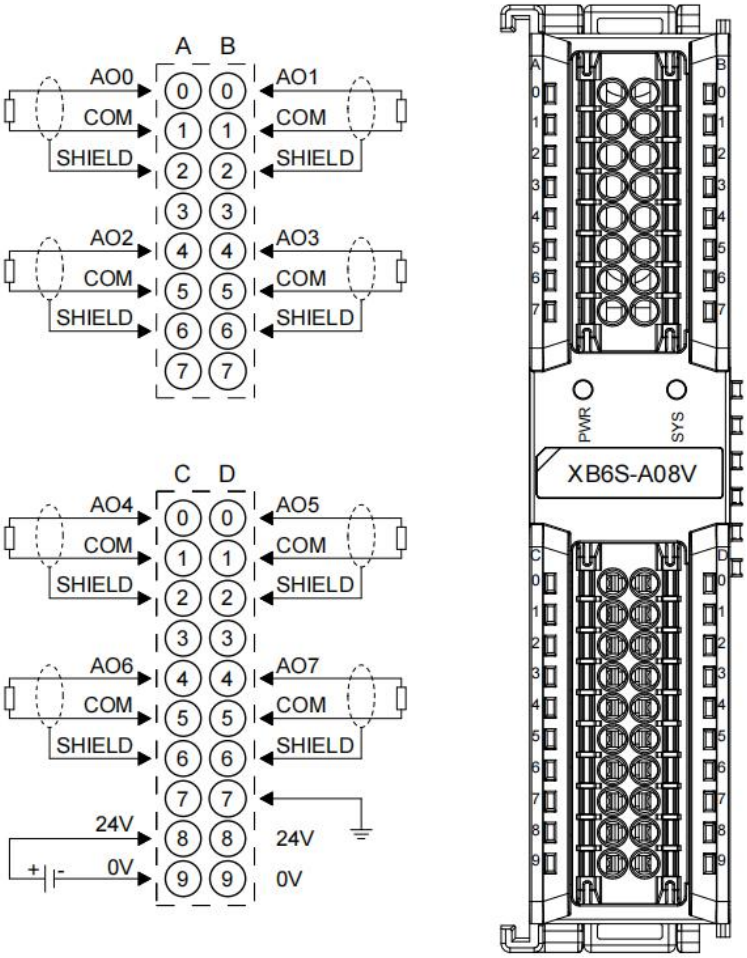

*COM internal conduction, SHIELD internal conduction

*All channel loads must originate from the same source.

*Shielded twisted-pair cables are recommended for signal cables.

 Copyright © 2024-2025 Nanjing Solidot Electronic Technology Co., Ltd.

3.3.7.12 XB6S-A04V

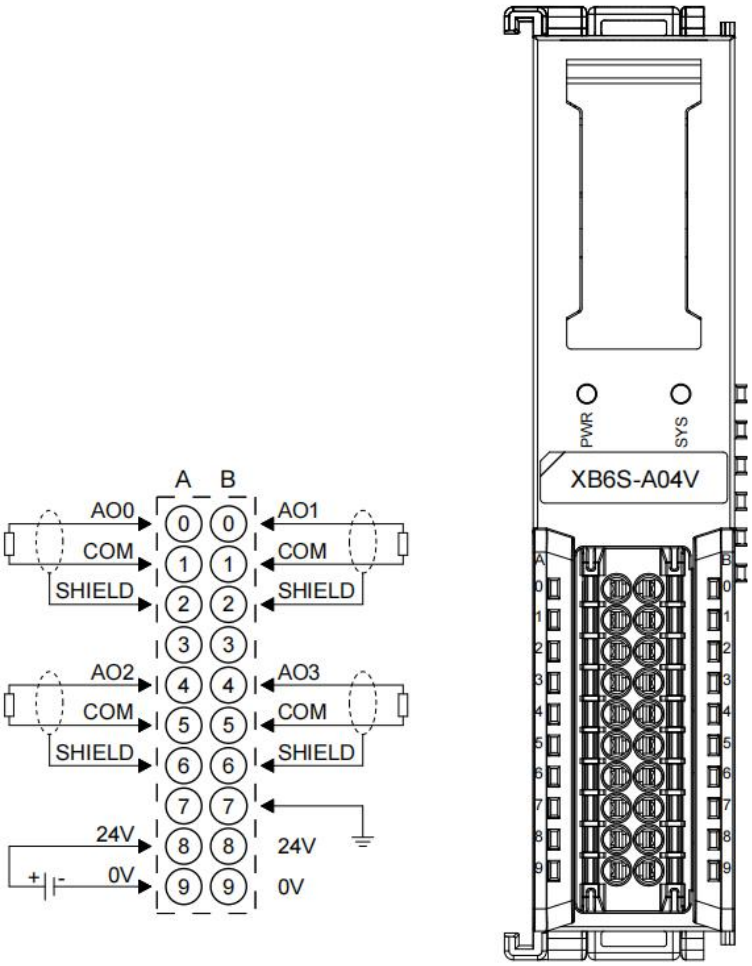

*COM internal conduction, SHIELD internal conduction

*All channel loads must originate from the same source.

*Shielded twisted-pair cables are recommended for signal cables.

 Copyright © 2024-2025 Nanjing Solidot Electronic Technology Co., Ltd.

3.3.7.13 XB6S-A08I

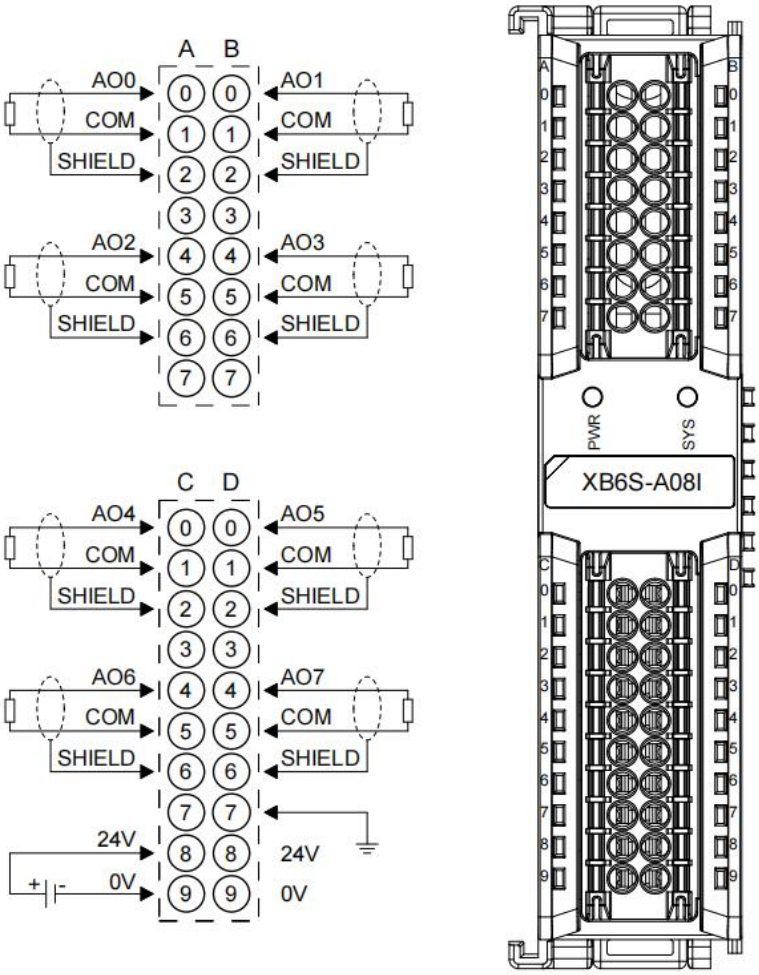

*COM internal conduction, SHIELD internal conduction

*All channel loads must originate from the same source.

*Shielded twisted-pair cables are recommended for signal cables.

 Copyright © 2024-2025 Nanjing Solidot Electronic Technology Co., Ltd.

3.3.7.14 XB6S-A04I

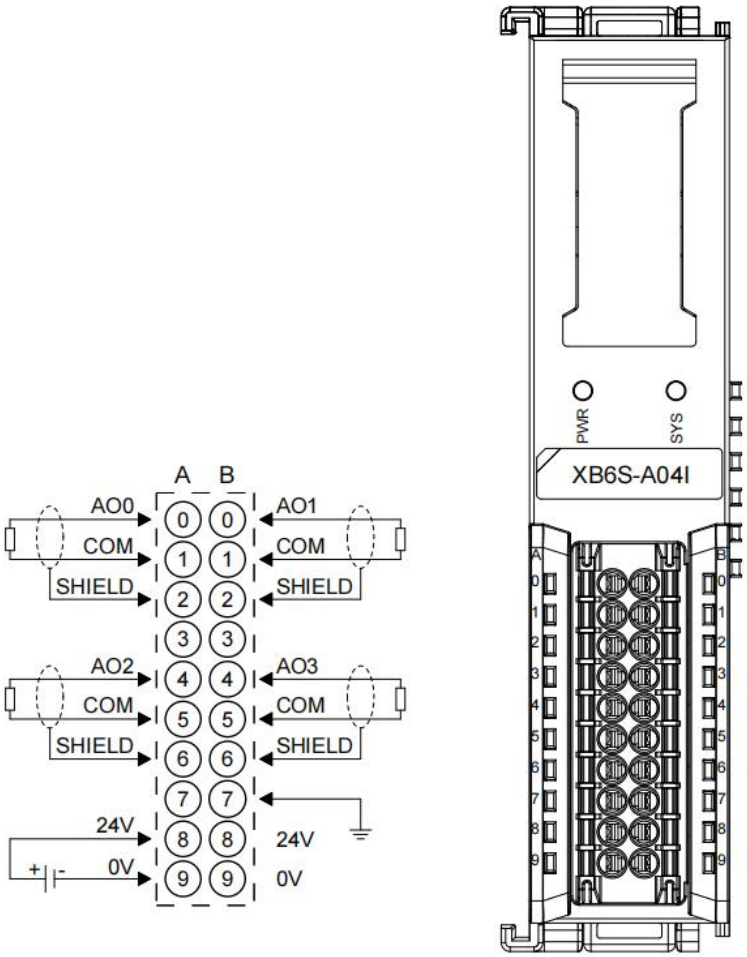

*COM internal conduction, SHIELD internal conduction

*All channel loads must originate from the same source.

*Shielded twisted-pair cables are recommended for signal cables.

 Copyright © 2024-2025 Nanjing Solidot Electronic Technology Co., Ltd.

3.3.7.15 XB6S-A08

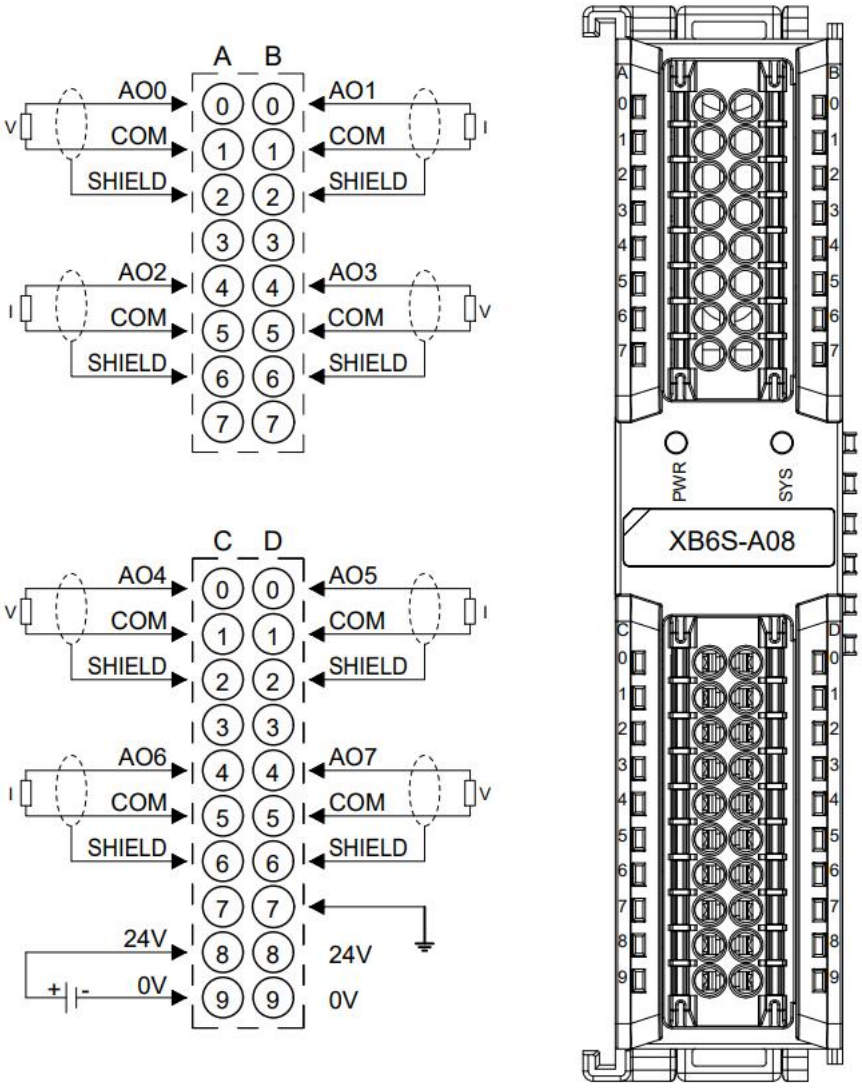

*COM internal conduction, SHIELD internal conduction

*All channel loads must originate from the same source.

*Shielded twisted-pair cables are recommended for signal cables.

 Copyright © 2024-2025 Nanjing Solidot Electronic Technology Co., Ltd.

3.3.7.16 XB6S-A04

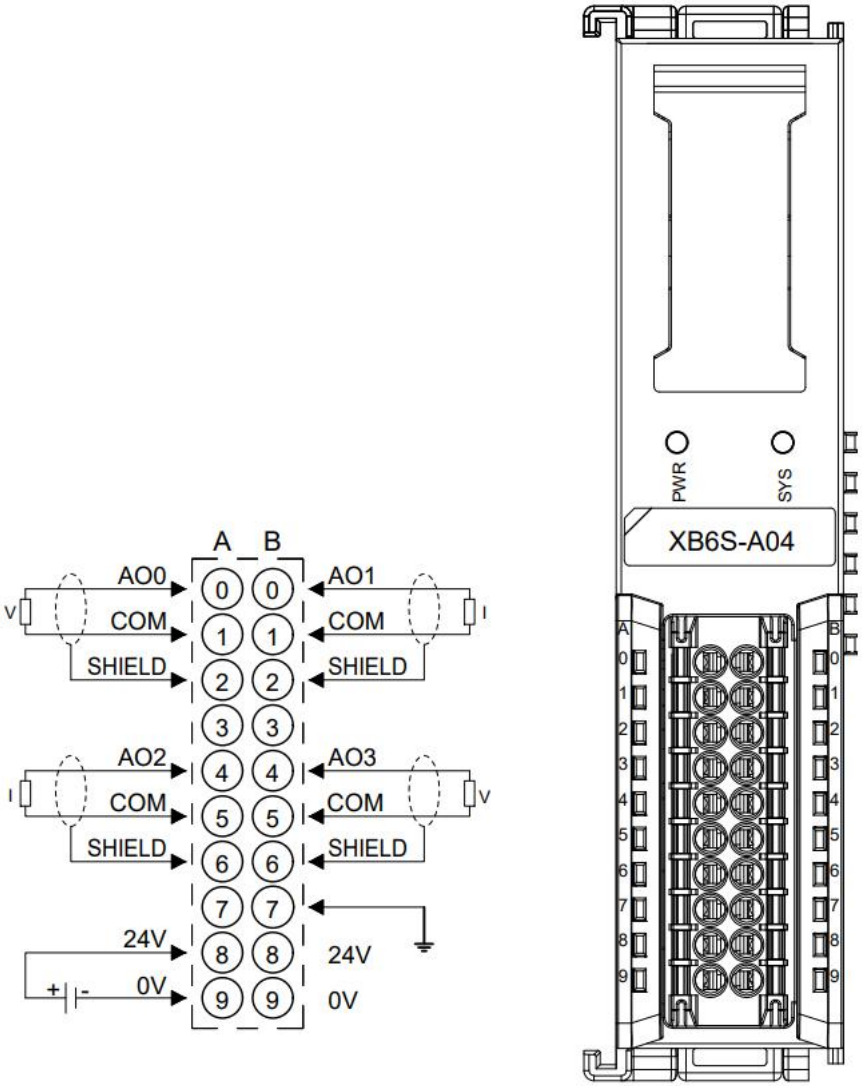

*COM internal conduction, SHIELD internal conduction

*All channel loads must originate from the same source.

*Shielded twisted-pair cables are recommended for signal cables.

 Copyright © 2024-2025 Nanjing Solidot Electronic Technology Co., Ltd.

3.3.8 Outline Dimensions

Dimensions of a 4-channel analog I/O module (in mm)

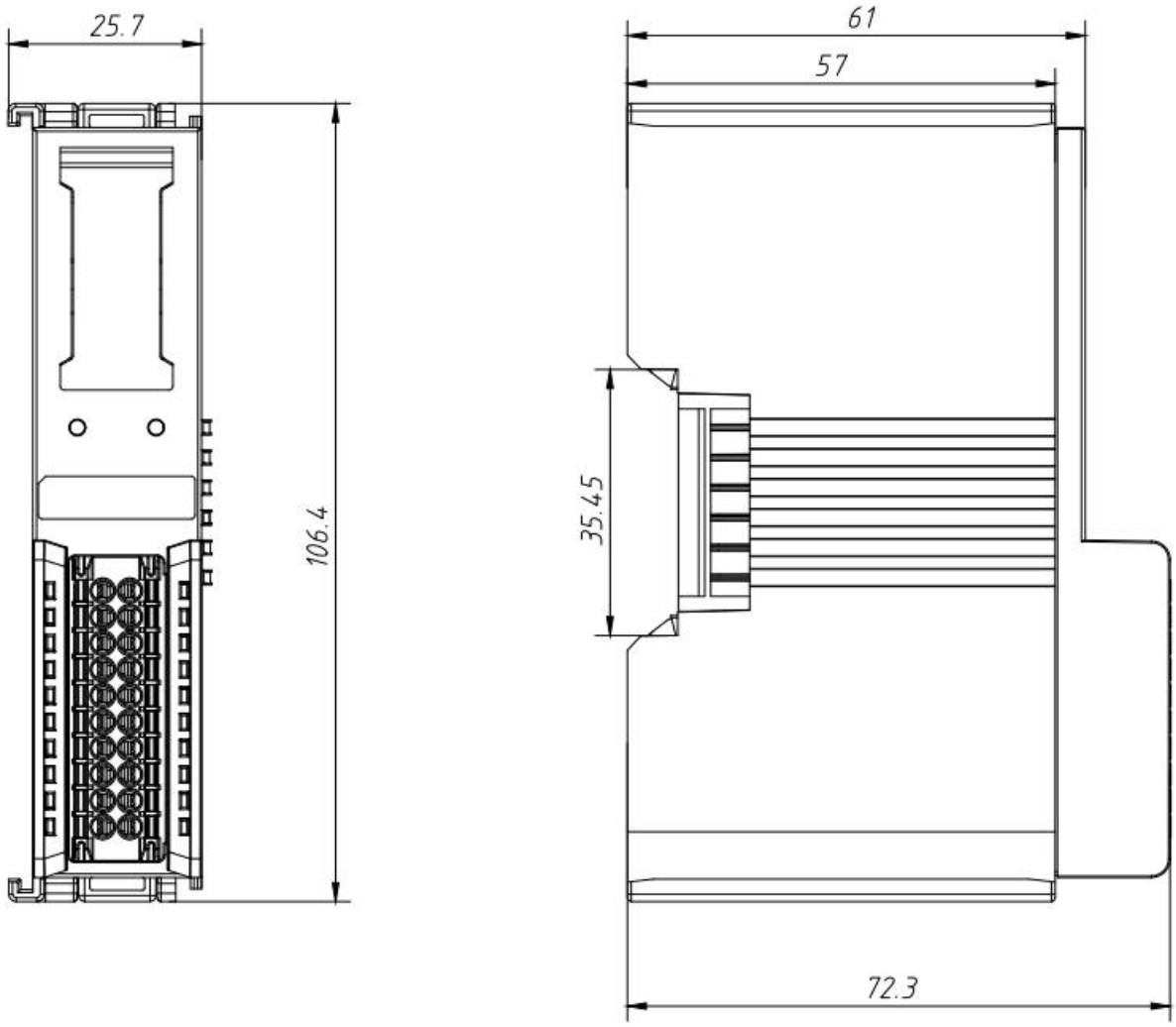

Copyright © 2024-2025 Nanjing Solidot Electronic Technology Co., Ltd.

Dimensions of an 8-channel analog I/O module (in mm)

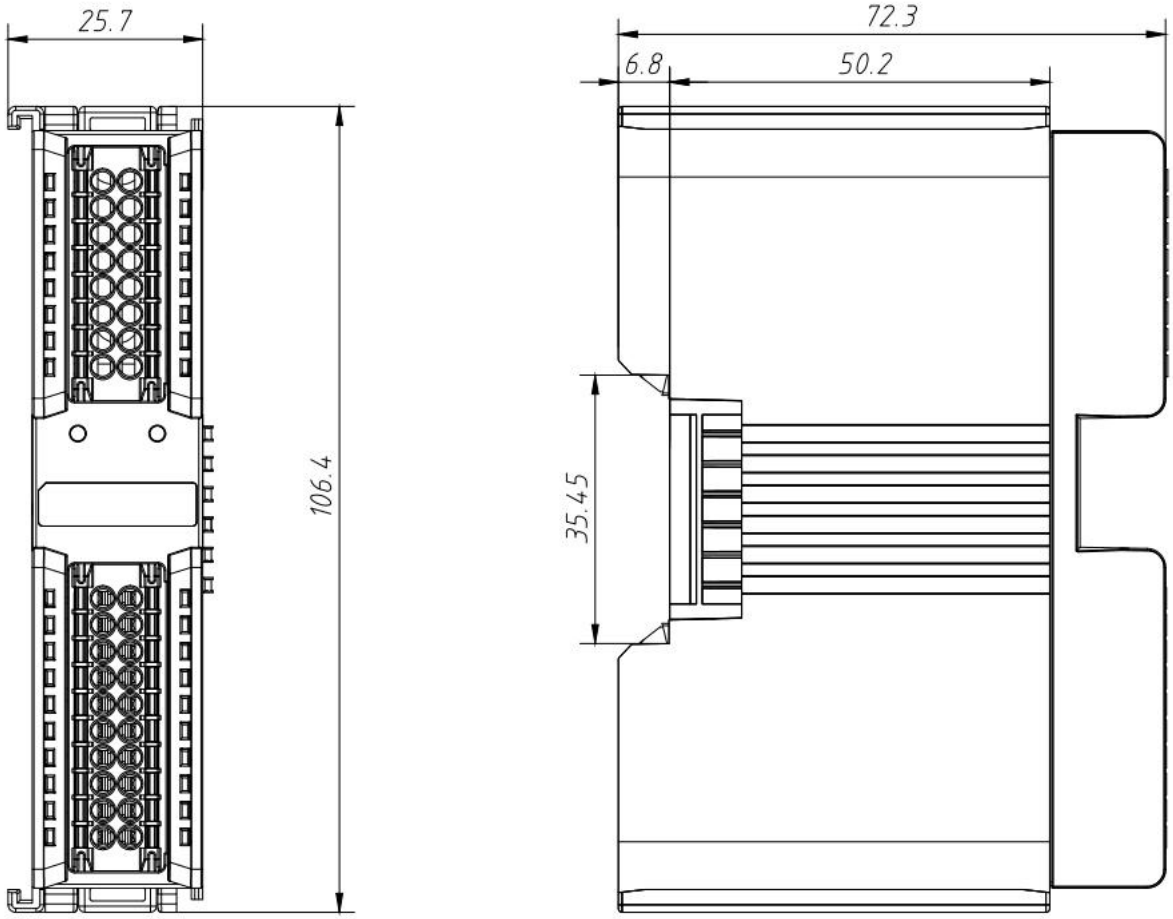

 Copyright © 2024-2025 Nanjing Solidot Electronic Technology Co., Ltd.

3.4 Extended power module

3.4.1 Panel structure

3.4.2 Indicator function

Extended power module Indicator definition				
logo	**name**	**color**	**state**	**Status Description**
PWR	Power Indicator	green	ON	The module power supply is working normally.
			OFF	Module not powered or power supply abnormal
OVR	Overload Indicator	red	OFF	Not overloaded
			ON	The load reaches 90% (±5%) or more.

Copyright © 2024-2025 Nanjing Solidot Electronic Technology Co., Ltd.

3.4.3 Technical parameters

Power parameters	
Input voltage	SELV Input 24VDC (18V~36V)
Input current	600mA (24VDC)
Output voltage	5VDC
Output current	2A
General technical parameters	
Specifications and dimensions	106.4 × 25.7 × 61mm
weight	110g
Operating temperature	-20℃~+60℃
Storage temperature	-40℃~+80℃
relative humidity	95%, no condensation
Altitude	≤2000m
Pollution level	Level 2
Short circuit protection	Supports (automatic recovery mechanism)
Reverse connection protection	Supports (automatic recovery mechanism)
Surge protection	support
Protection level	IP20
Safety certification	UL certification, CE certification
Green certification	RoHS certification, REACH certification

Copyright © 2024-2025 Nanjing Solidot Electronic Technology Co., Ltd.

3.4.4 Wiring diagram

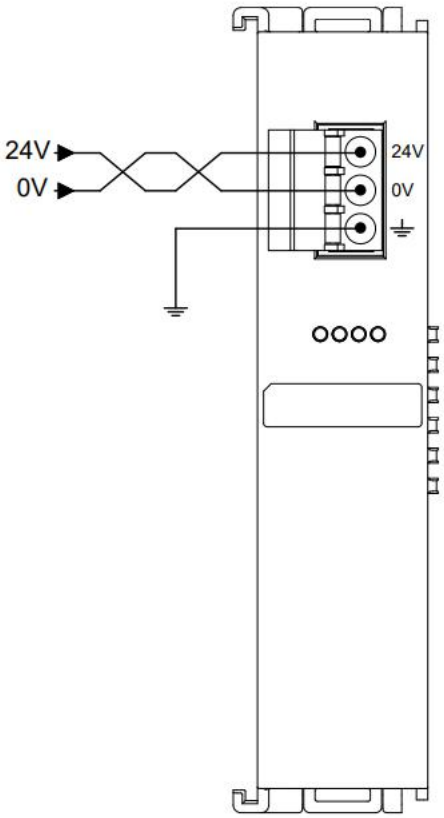

Copyright © 2024-2025 Nanjing Solidot Electronic Technology Co., Ltd.

3.4.5 Outline Dimensions

Extended power supply dimensions (unit: mm)

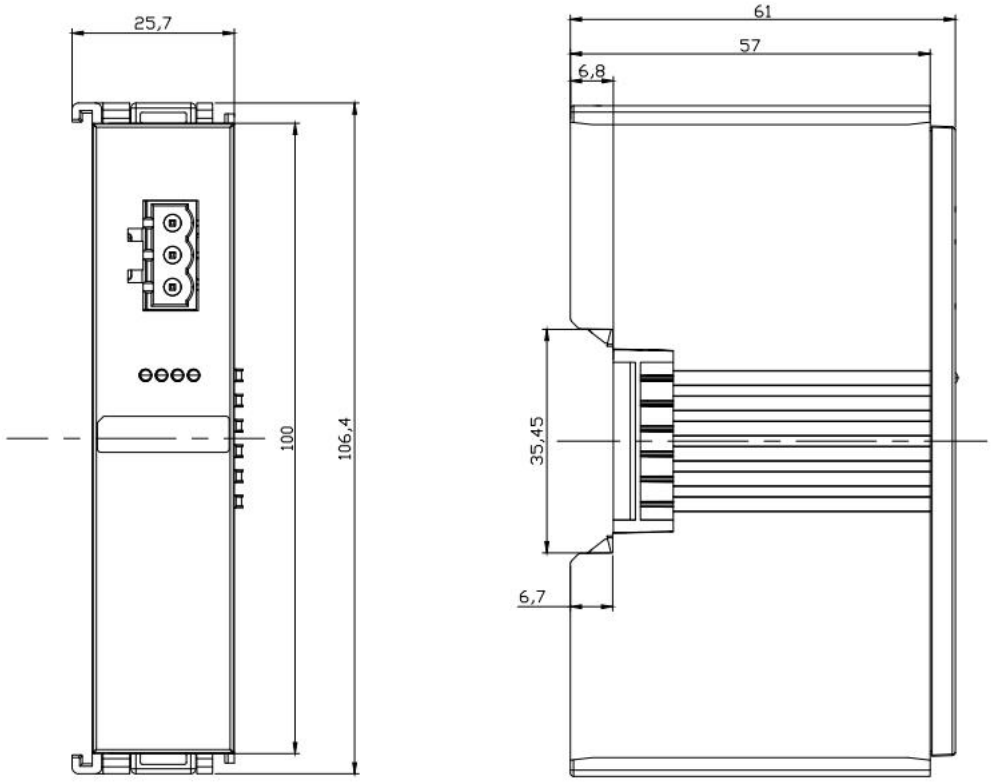

 Copyright © 2024-2025 Nanjing Solidot Electronic Technology Co., Ltd.

3.5 Public End Extension Module

3.5.1 Technical parameters

Common terminal parameters	
Rated voltage	24VDC (18V~36V)
Rated current	8A
Number of public terminals	2 groups
General technical parameters	
Specifications and dimensions	106.4 × 25.7 × 72.3mm
weight	95g
Operating temperature	-20℃~+60℃
Storage temperature	-40℃~+80℃
relative humidity	95%, no condensation
Altitude	≤2000m
Pollution level	Level 2
Protection level	IP20
Safety certification	UL certification, CE certification
Green certification	RoHS certification, REACH certification

 Copyright © 2024-2025 Nanjing Solidot Electronic Technology Co., Ltd.

3.5.2 Wiring diagram

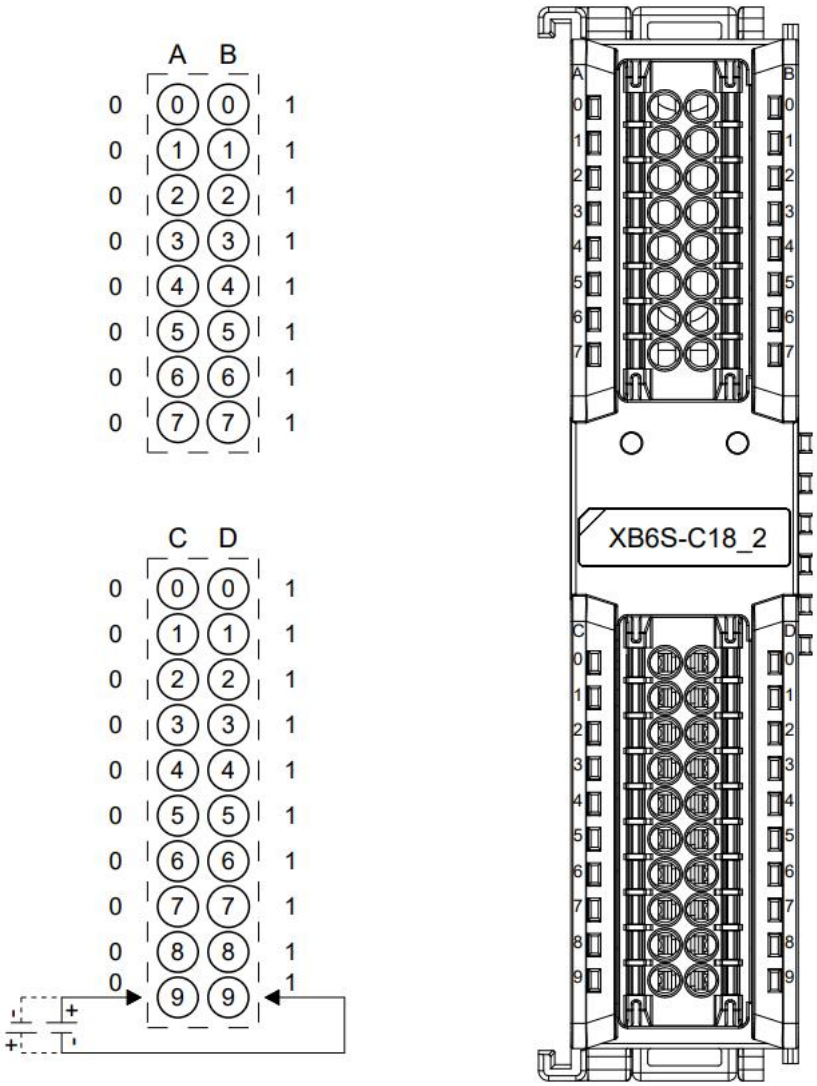

*Channel identifier 0 indicates internal conduction.

*Channel Identifier 1: Internal Conductor

 Copyright © 2024-2025 Nanjing Solidot Electronic Technology Co., Ltd.

3.5.3 Outline Dimensions

External dimensions (unit: mm)

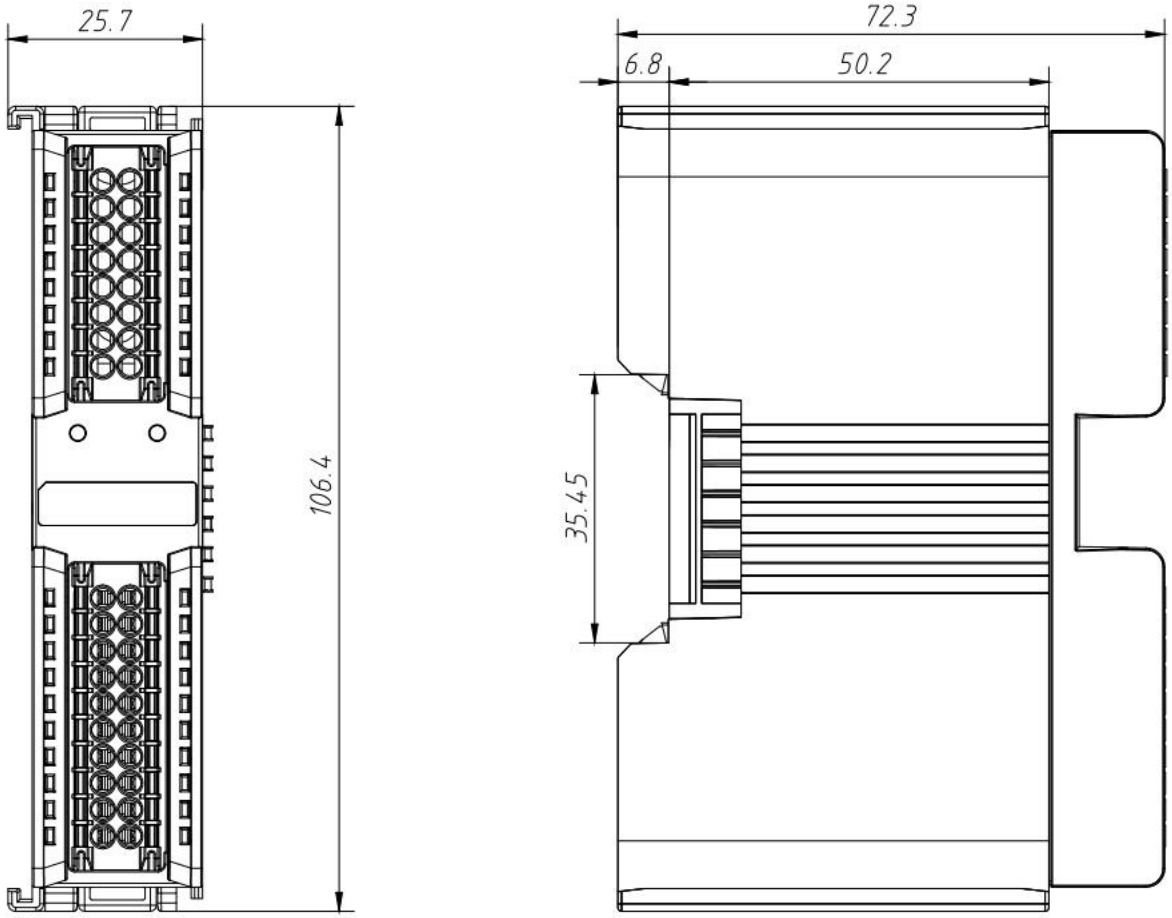

Copyright © 2024-2025 Nanjing Solidot Electronic Technology Co., Ltd.

3.6 Terminal cover

3.6.1 Outline Dimensions

Terminal cover dimensions (unit: mm)

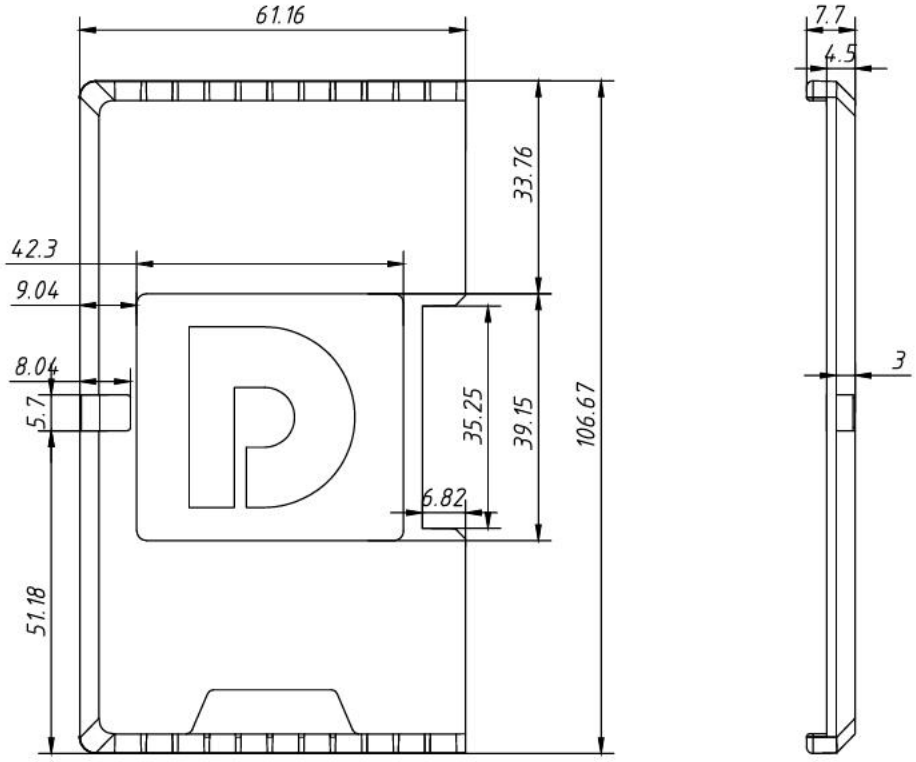

Note: All installations use DIN 35 mm standard rails. DIN rail specifications are 35*7.5*1.0 and 35*15*1.0 (unit: mm).

 Copyright © 2024-2025 Nanjing Solidot Electronic Technology Co., Ltd.

4 Installation and removal

4.1 Installation Guide

Installation/Removal Precautions

- **The module has an IP20 protection rating and must be installed in a cabinet for indoor use.**
- **Ensure that the server rack has good ventilation (such as installing exhaust fans in the server rack).**
- **Do not install this device next to or above equipment that may cause overheating.**
- **Make sure to install the module vertically on the fixed guide rail and ensure that there is air circulation around it (there should be at least 50mm of air circulation space above and below the module).**
- **After the module is installed, be sure to install guide rail fasteners at both ends to secure the module.**

⚠ ● **Installation/removal must be performed with the power off.**

- **After the module is installed, it is recommended to connect and wire the cables using a top-to-bottom wiring method.**

warn

● If the device is not used in accordance with the product user manual, the protection it provides may be compromised.

 Copyright © 2024-2025 Nanjing Solidot Electronic Technology Co., Ltd.

Module installation diagram, minimum vertical clearance (≥50mm)

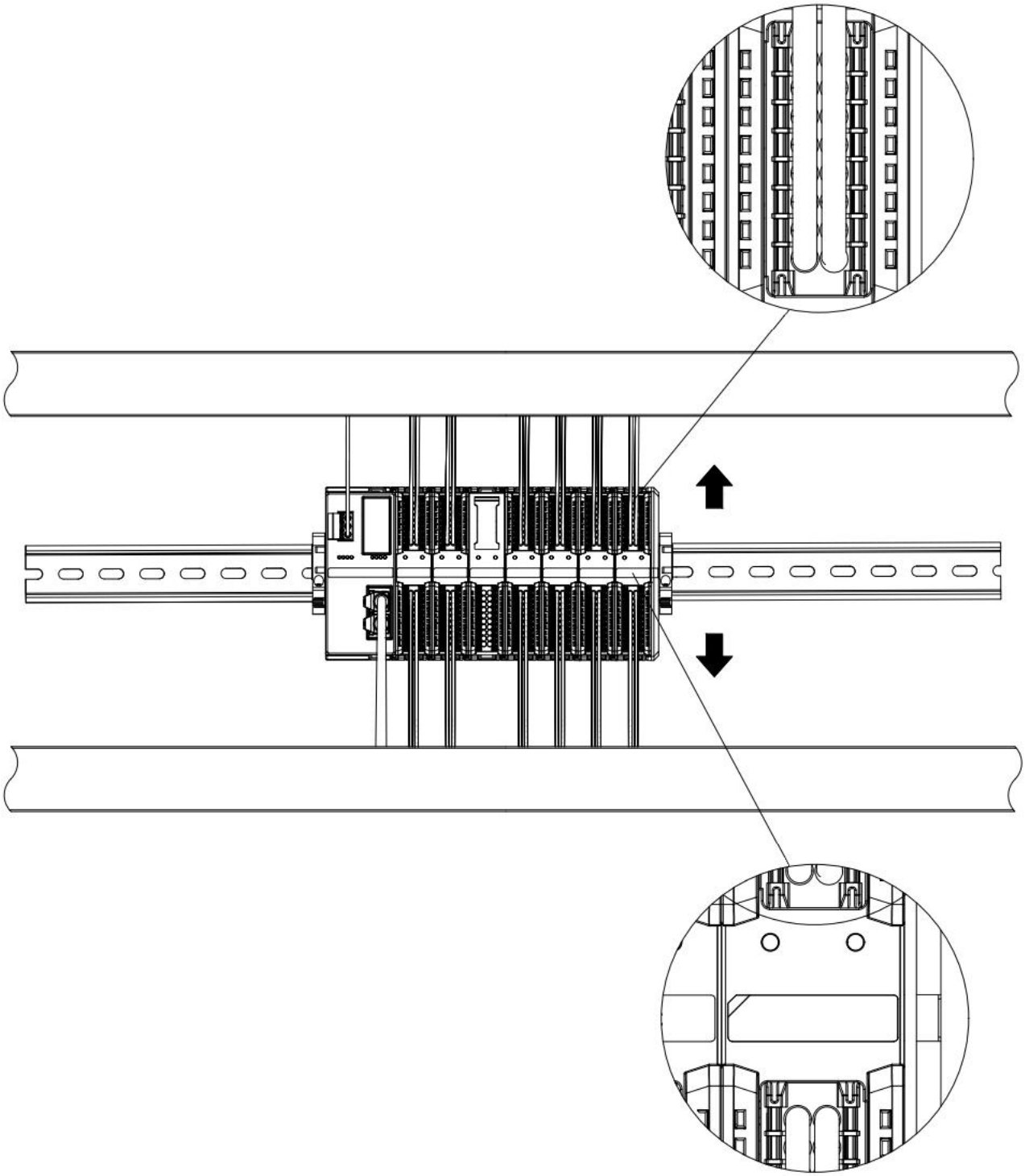

 Copyright © 2024-2025 Nanjing Solidot Electronic Technology Co., Ltd.

Ensure the module is installed vertically on the fixed guide rail.

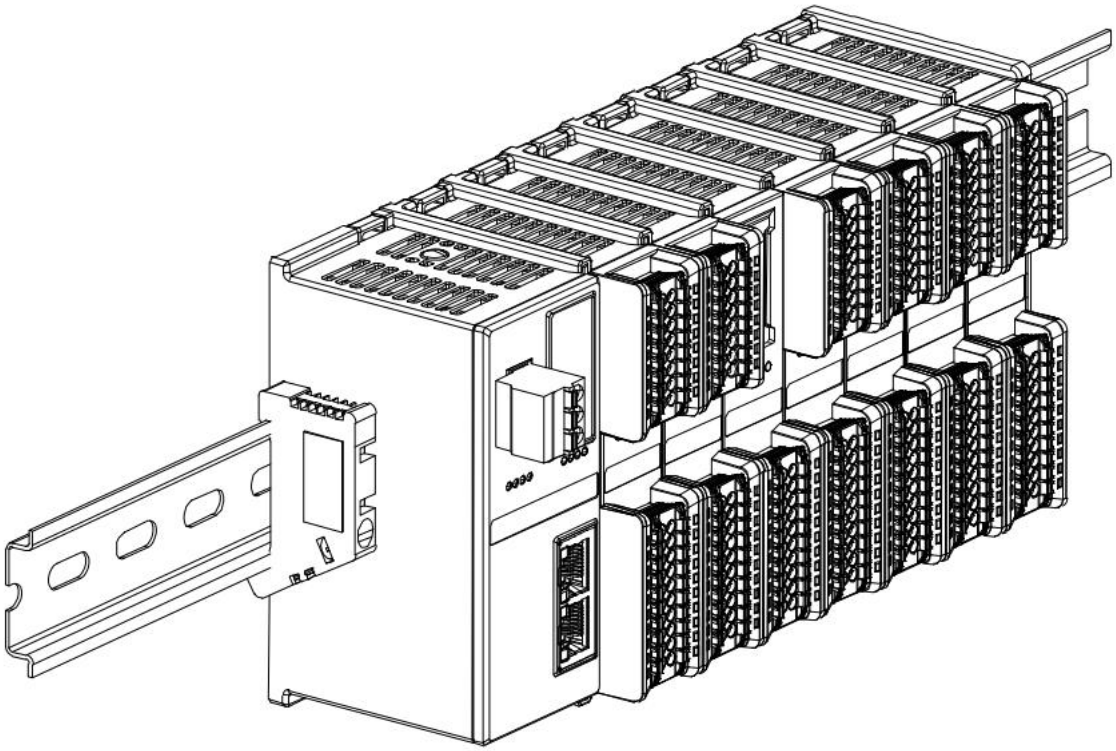

Be sure to install the guide rail fasteners.

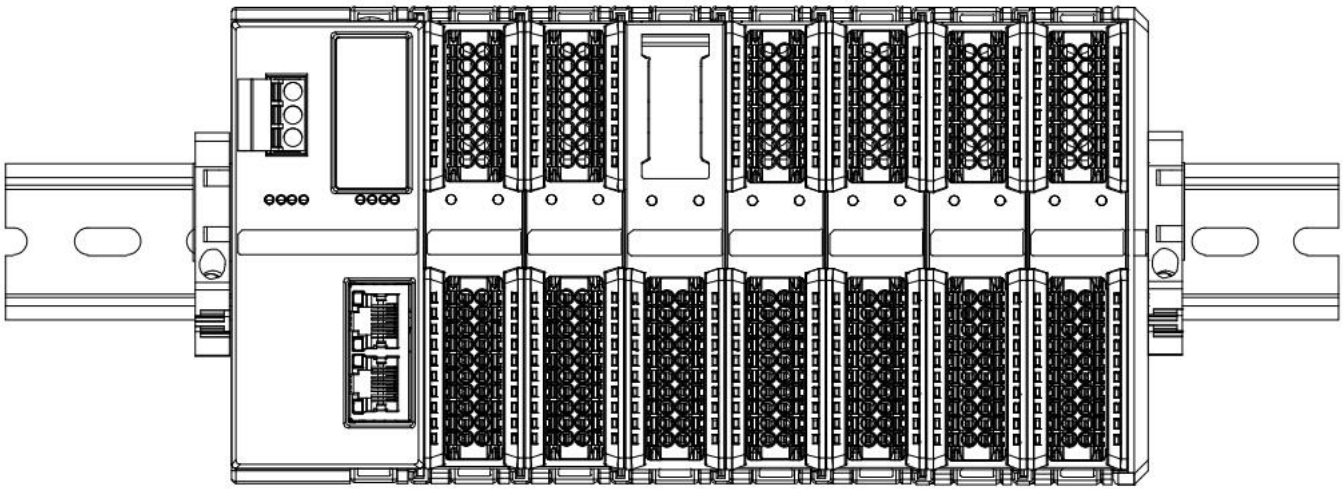

 Copyright © 2024-2025 Nanjing Solidot Electronic Technology Co., Ltd.

Module top and bottom wiring diagram

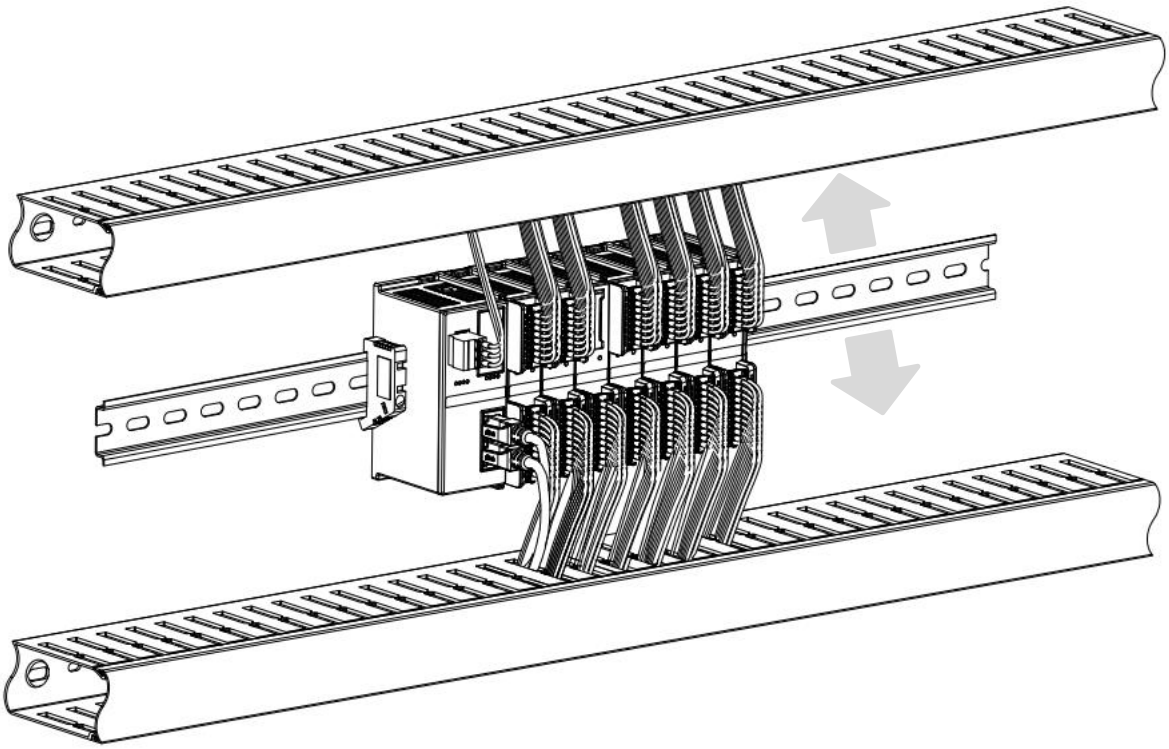

4.2 Installation and disassembly steps

Module installation and removal	
Module installation steps	1. First, install the coupler module on the fixed guide rail.
	2. Install the required I/O modules or functional modules in sequence on the right side of the coupler module.
	3. After installing all the necessary modules, install the terminal cover to complete the module assembly.
	4. Install guide rail fasteners at both ends of the coupler module and the terminal cover to fix the module.
Module disassembly steps	1. Loosen the guide rail fasteners at both ends of the module.
	2. Use a flathead screwdriver to pry open the module clips.
	3. Remove the disassembled module.

 Copyright © 2024-2025 Nanjing Solidot Electronic Technology Co., Ltd.

4.3 Installation and disassembly diagram

Coupler module installation

- Align the coupler module vertically with the guide rail slot, as shown in Figure ① below.

①

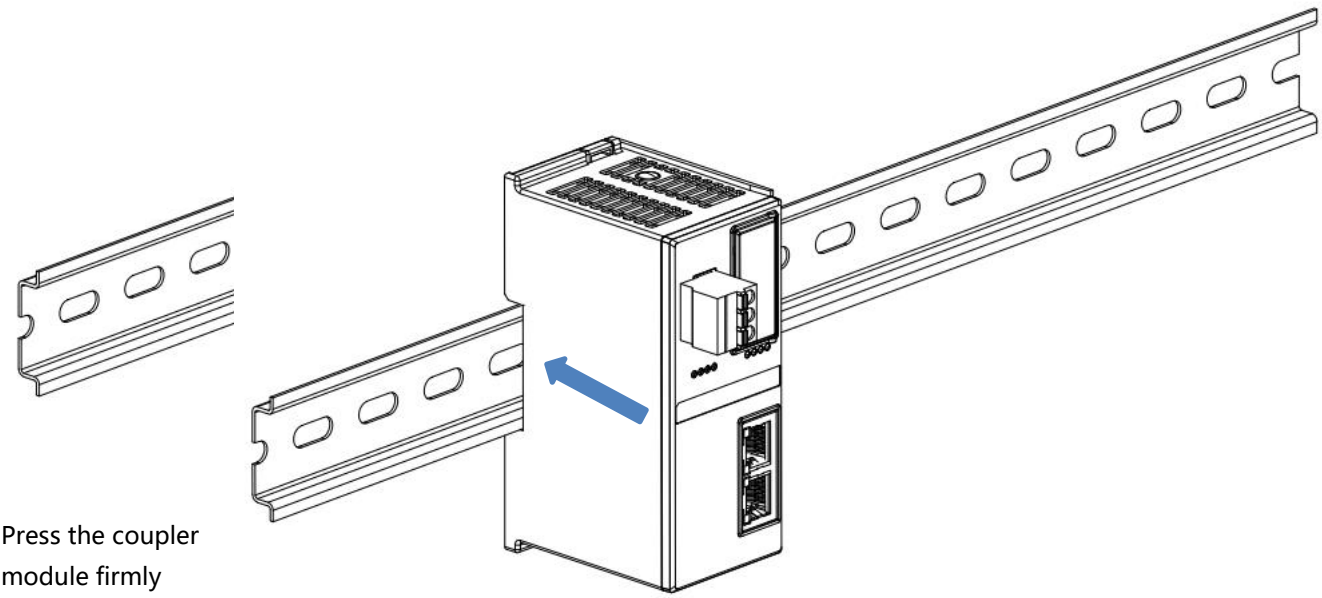

- Press the coupler module firmly into the guide rail direction until you hear a "click" sound, indicating that the module is installed in place, as shown in Figure ② below.

②

Copyright © 2024-2025 Nanjing Solidot Electronic Technology Co., Ltd.

I/O module installation

- Following the steps described above for installing the coupler module, install the required I/O modules or functional modules one by one, as shown in Figures ③, ④, and ⑤. Push them in until you hear a "click" sound, indicating that the module is installed in place.

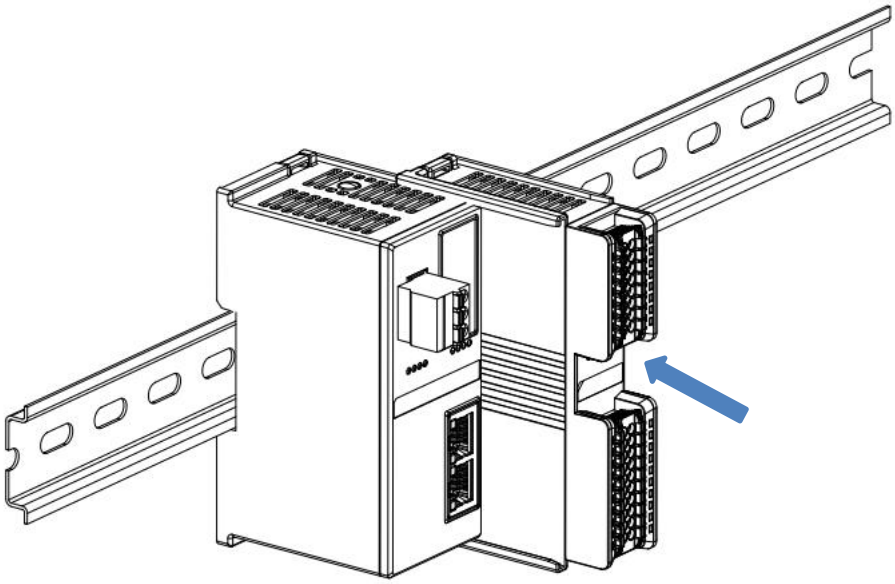

③

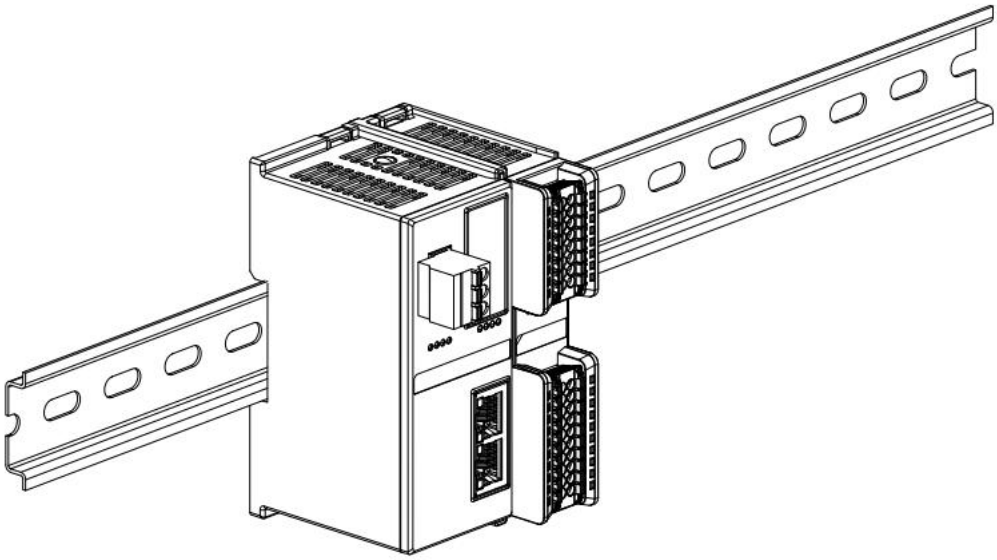

④

 Copyright © 2024-2025 Nanjing Solidot Electronic Technology Co., Ltd.

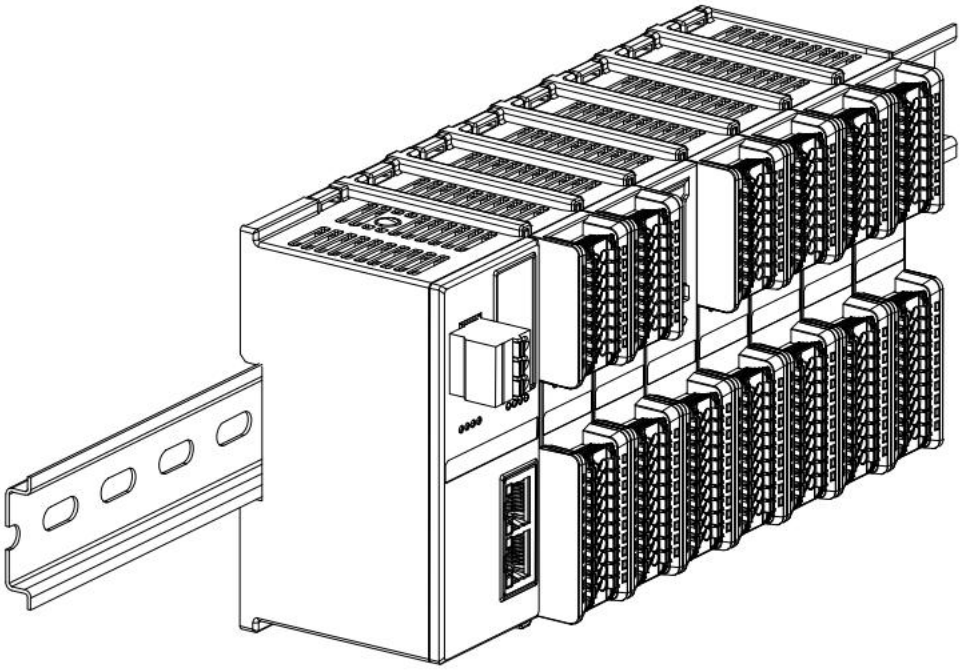

⑤

Terminal cover installation

- Install the terminal cover on the right side of the last module. Align the groove side of the terminal cover with the guide rail. For the installation method, please refer to the installation method of the I/O module. Push the terminal cover inward into place, as shown in Figure 6 below.

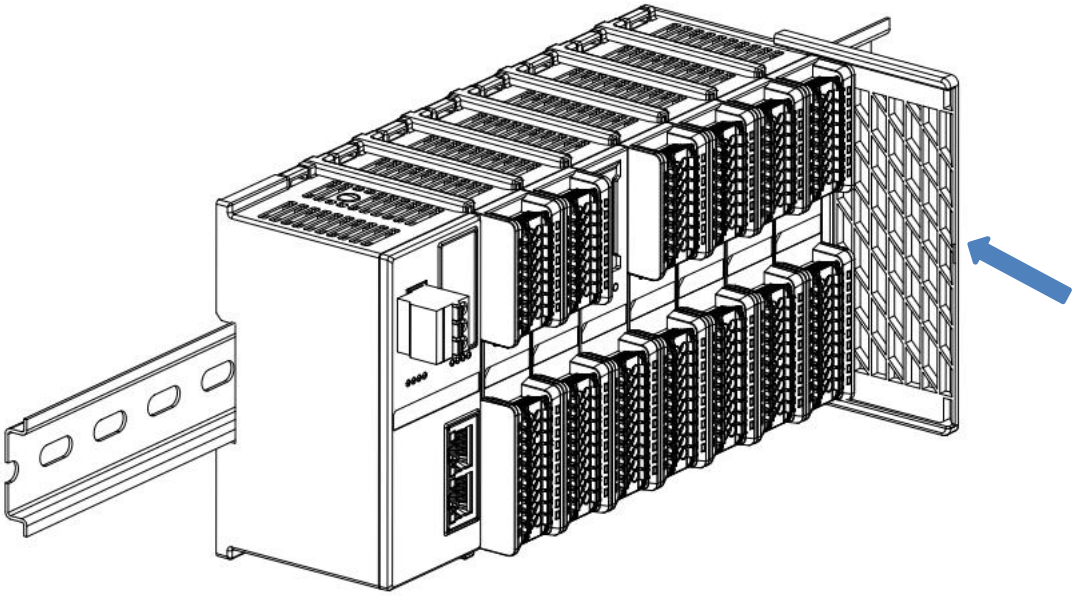

⑥

 Copyright © 2024-2025 Nanjing Solidot Electronic Technology Co., Ltd.

- After the terminal cover is installed, check whether the front of the entire module is flat, and ensure that all modules and end covers are installed in place and the front is flush, as shown in Figure 7 below.

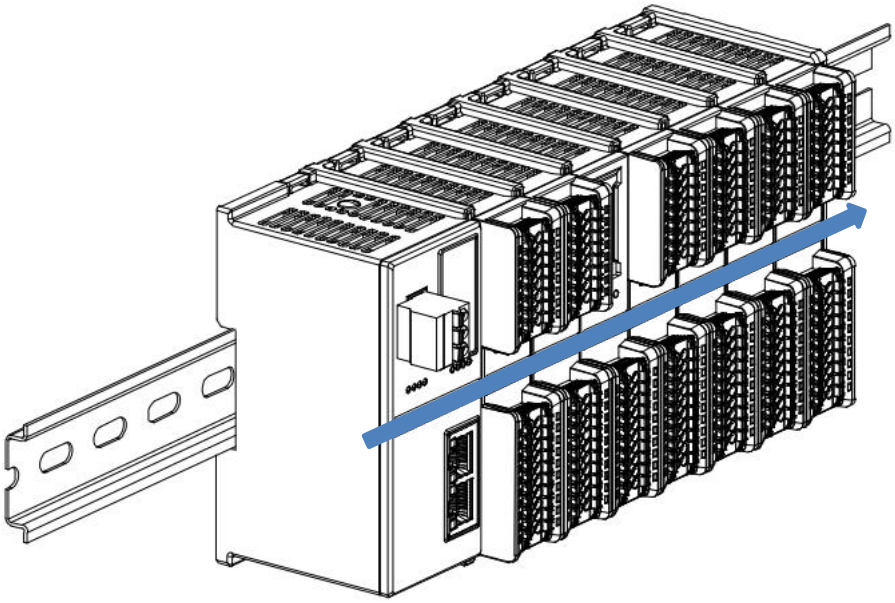

⑦

Guide rail fastener installation

- Install and tighten the guide rail fastener close to the left side of the coupler, as shown in Figure 8 below.

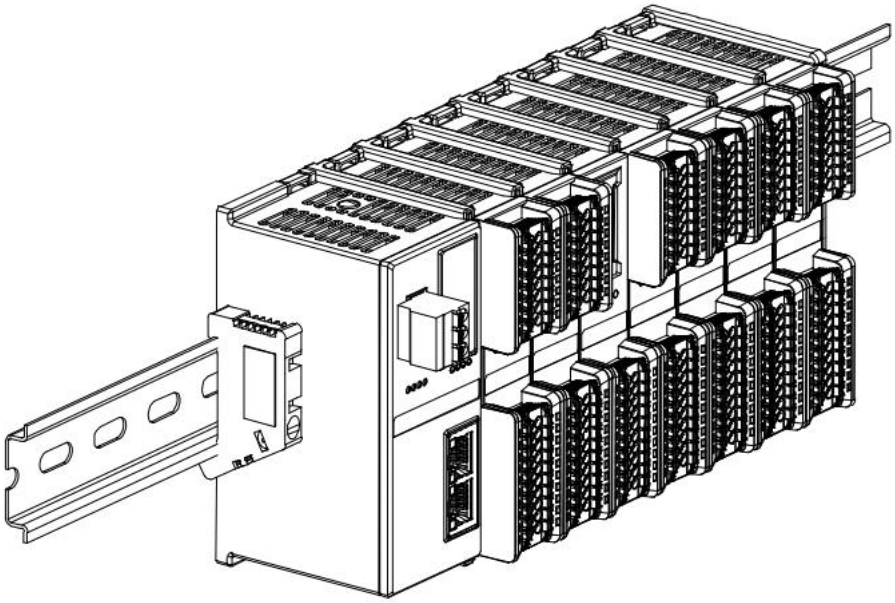

⑧

 Copyright © 2024-2025 Nanjing Solidot Electronic Technology Co., Ltd.

- Install the guide rail fastener on the right side of the terminal cover. First, push the guide rail fastener towards the coupler to ensure that the module is installed securely, and then tighten the guide rail fastener with a screwdriver, as shown in Figure 9 below.

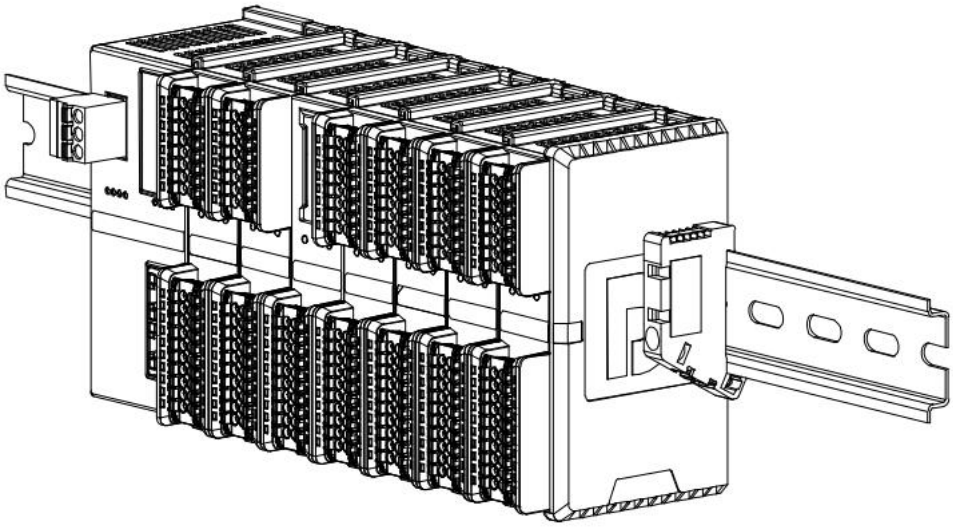

9

Disassembly

- Loosen the guide rail fastener at one end of the module with a screwdriver and move it to one side,

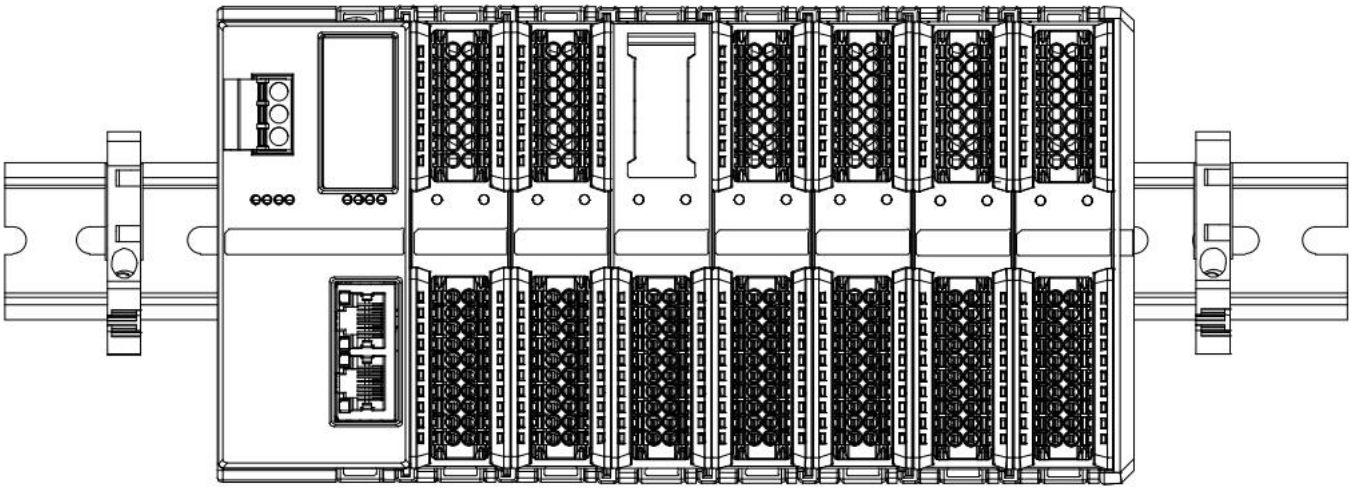

ensuring there is a gap between the module and the guide rail fastener, as shown in Figure 10 below.

⑩

 Copyright © 2024-2025 Nanjing Solidot Electronic Technology Co., Ltd.

- Insert the flathead screwdriver into the clips of the module to be removed, and apply force from the side towards the module (you will hear a click), as shown in the picture below.⑪and⑫As shown.
  Note: Each module has a latch at the top and bottom; operate in the same way for all of them.

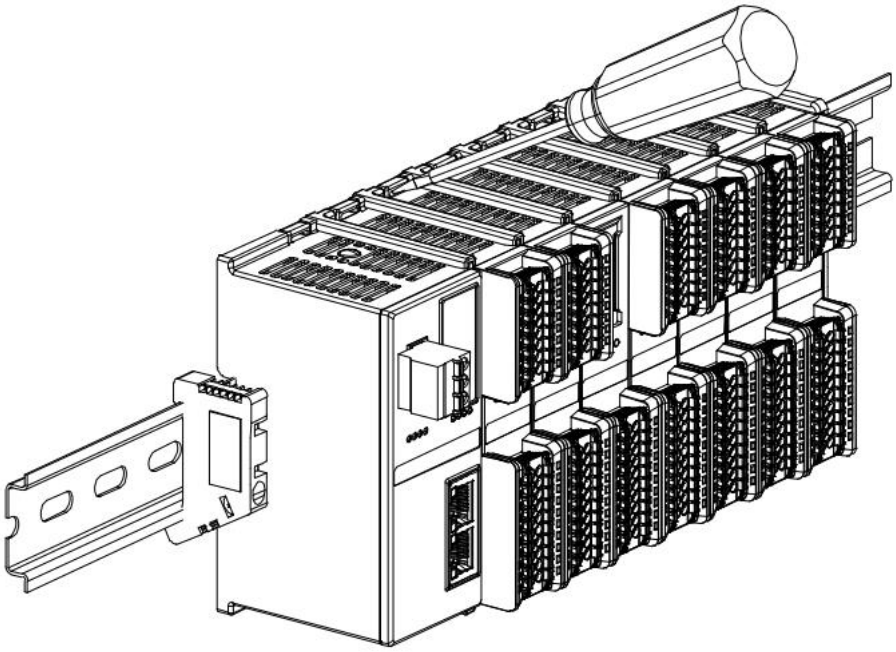

⑪

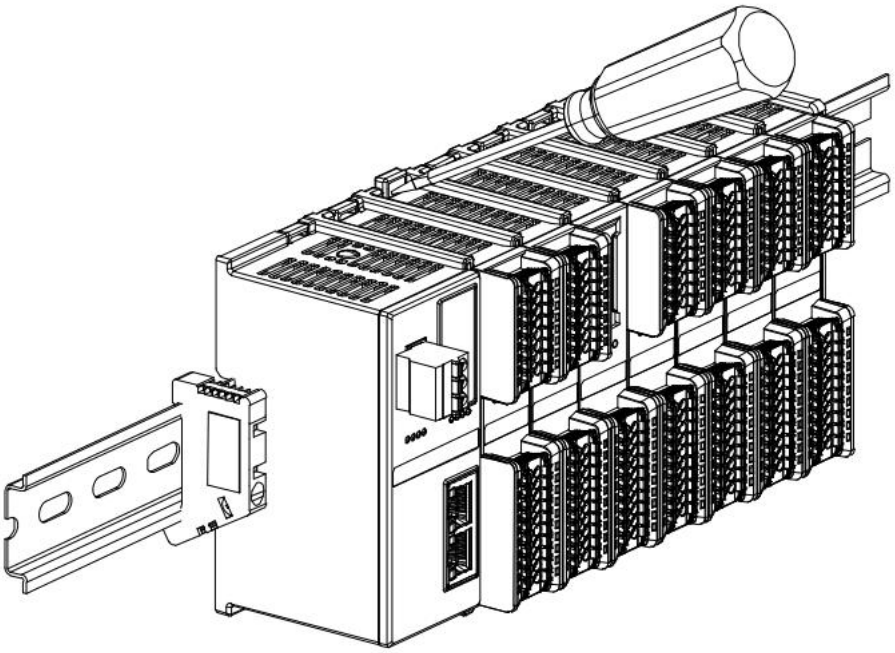

⑫

 Copyright © 2024-2025 Nanjing Solidot Electronic Technology Co., Ltd.

- Disassemble the module following the reverse procedure of installing the module, as shown in the following figure.⑬As shown.

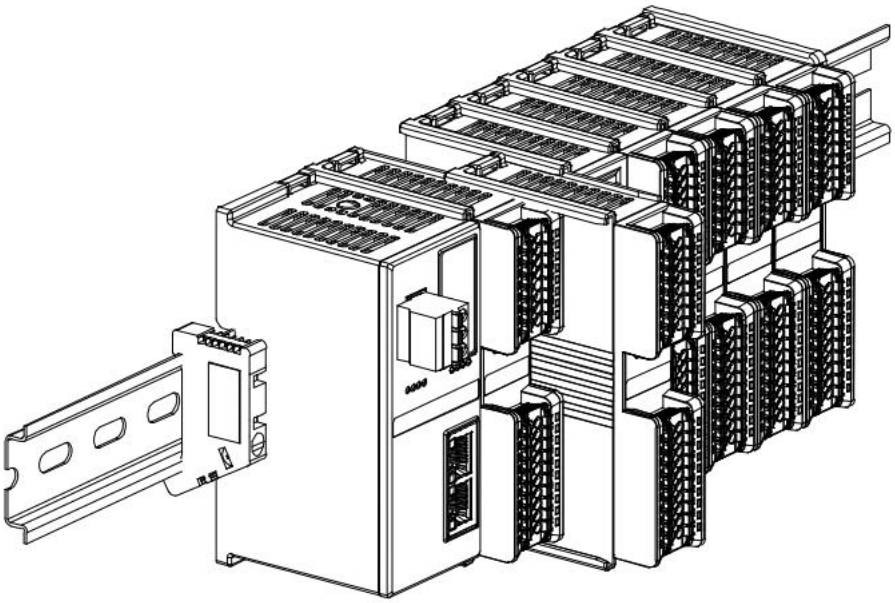

⑬

 Copyright © 2024-2025 Nanjing Solidot Electronic Technology Co., Ltd.

5 wiring

5.1 Terminal blocks

warn

Terminal blocks		
Power terminals	Rated voltage	320V
	Rated current	20A
	Extreme number	3P
	wire diameter	twenty two~16 AWG 0.3~1.5 mm²
Signal line terminals (i.e., input/output terminals)	Rated voltage	200V
	Rated current	9.5A
	Extreme number	16P+20P
	wire diameter	twenty two~17 AWG 0.3~1.0 mm²
Bus interface	2×RJ45	UTP or STP of Category 5 or higher (STP recommended)

5.2 Wiring instructions and requirements

Power connection precautions

- The power supply for the module system side and the power supply for the field side should be configured and used separately. Do not mix them.
- Reliable grounding is required.

 Copyright © 2024-2025 Nanjing Solidot Electronic Technology Co., Ltd.

Wiring tool requirements

The power terminals and signal terminals feature a screwless design, allowing for cable installation and removal using a flathead screwdriver (size: ≤3mm).

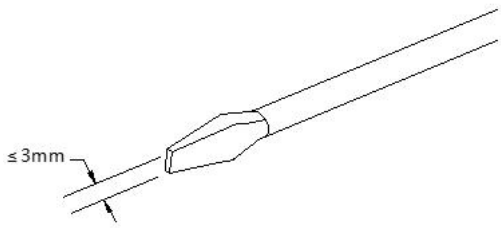

Copyright © 2024-2025 Nanjing Solidot Electronic Technology Co., Ltd.

Stripping length requirements

For power and signal line terminals, a cable stripping length of 10 mm is recommended.

Wiring method

For a single-strand rigid wire, after stripping the wire to the corresponding length, press the button and insert the single-strand wire directly into the corresponding end hole.

After stripping the wire to the corresponding length, the multi-strand flexible wire can be directly connected or used with the corresponding standard cold-pressed terminals (tubular insulated terminals, see the table below for reference specifications). Pressing down the button will insert the insulated terminal directly into the corresponding end hole.

The specifications for power supply terminals and signal line terminals are shown in the table below:

Specifications of tubular insulated ends		
Specifications	model	conductor cross-sectional area (mm²)
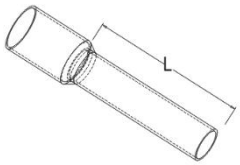 Tubular insulated terminalsLThe length is10mm	E0310	0.3
	E0510	0.5
	E7510	0.75
	E1010	1.0
	E1510	1.5

warn

- Only copper wires can be used for wiring.

 Copyright © 2024-2025 Nanjing Solidot Electronic Technology Co., Ltd.

warn

- Cable temperature: 80℃.

Copyright © 2024-2025 Nanjing Solidot Electronic Technology Co., Ltd.

5.3 MIL Connector Type Module Wiring Instructions

5.3.1 Compatible Product List

MIL connector type I/O modules require connection to a terminal block via a cable with a connector for use.

model	describe	Adapter terminal block	Adapter Cable
XB6S-3200N	32-channel digital input, NPN/PNP compatible	TM40-32AE	TM40-XXXX-1 TM40-XXXX-1S
		TM40-32BE	TM40-XXXX-2 TM40-XXXX-2S
XB6S-0032AN	32-channel digital output, NPN type	TM40-32AE	TM40-XXXX-1 TM40-XXXX-1S
XB6S-0032BN	32-channel digital output, PNP type	TM40-32BE	

Note: The TM40-XXXX-2/TM40-XXXX-2S model cable is a PNP type input cable and cannot be used with other types of input/output.

5.3.2 Terminal block naming rules

The terminal blocks for this product include TM40-32AE and TM40-32BE, and the naming rules are as follows.

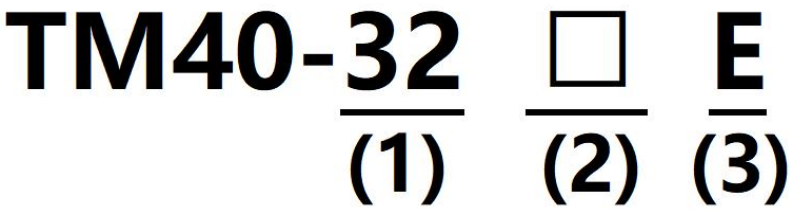

serial number	meaning	Options	illustrate
(1)	Number of terminal blocks	32	32 points
(2)	Input/Output Types	A	NPN type input/output
		B	PNP type input/output
(3)	Terminal block type	E	European-style terminal block

 Copyright © 2024-2025 Nanjing Solidot Electronic Technology Co., Ltd.

5.3.3 Cable naming rules

The terminal blocks and I/O connection cables for this product include TM40-XXXX-1, TM40-XXXX-1S, TM40-XXXX-2, and TM40-XXXX-2S, and the naming rules are as follows.

TM 40- □□□□ - □ □

(1) (2) (3)

serial number	meaning	Options	illustrate
(1)	Cable length	0500~1500	Cable length range, unit mm
(2)	Cable function	1	adaptation: NPN type input PNP type output NPN type output
		2	PNP type input dedicated
(3)	Cable shielding	S	Shielded cables
		default	Unshielded cable

Note: The TM40-XXXX-2/TM40-XXXX-2S model cable is a PNP type input cable and cannot be used with other types of input/output.

5.3.4 Terminal block parameters

Technical Specifications	
Rated current	1A
Rated voltage	DC24V
Suitable for wires	1.5mm²/AWG16 and below

5.3.5 Cable parameters

Technical Specifications	
Line gauge	AWG28
Conductor composition	7/0.127
Conductor materials	soft copper wire
Insulating materials	PE
Core wire twisting	Stuffing, cotton thread, straps, paper bags
Exterior covered	PVC
Conductor impedance (20℃)	less than 239Ω/Kn

 Copyright © 2024-2025 Nanjing Solidot Electronic Technology Co., Ltd.

Withstand voltage (in the air)	AC500V/min
Insulation resistance (20℃)	50MΩ/Kn or higher

Copyright © 2024-2025 Nanjing Solidot Electronic Technology Co., Ltd.

5.3.6 Configuration rules

- Configuration examples for NPN type input, NPN type output, and PNP type output

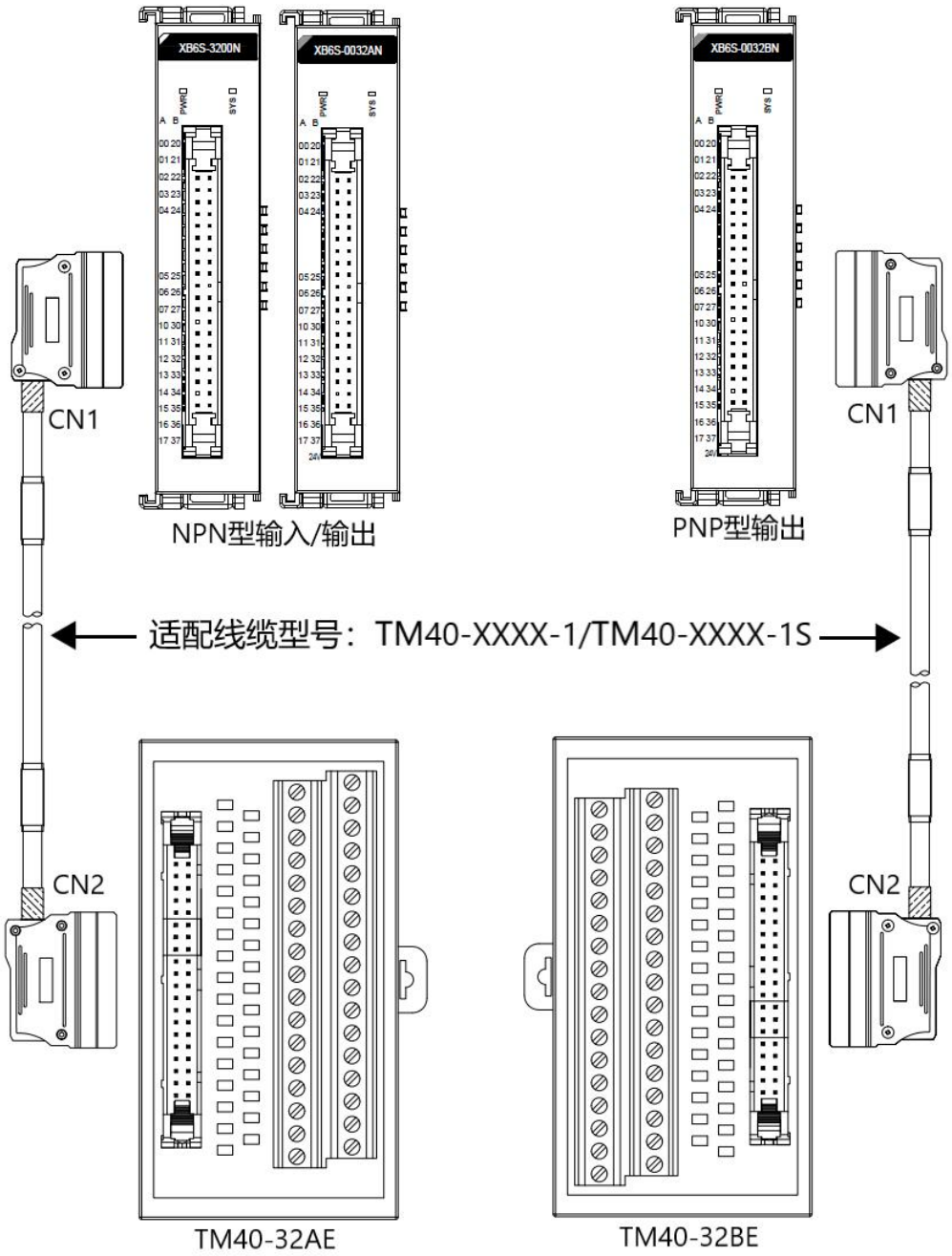

The cable is marked CN1 and CN2 at both ends. The I/O side is connected to the CN1 end, and the terminal block side is connected to the CN2 end.

 Copyright © 2024-2025 Nanjing Solidot Electronic Technology Co., Ltd.

- Configuration example for PNP type input

  When using the XB6S-3200N PNP type input, it must be used with a cable of type TM40-XXXX-2/TM40-XXXX-2S.

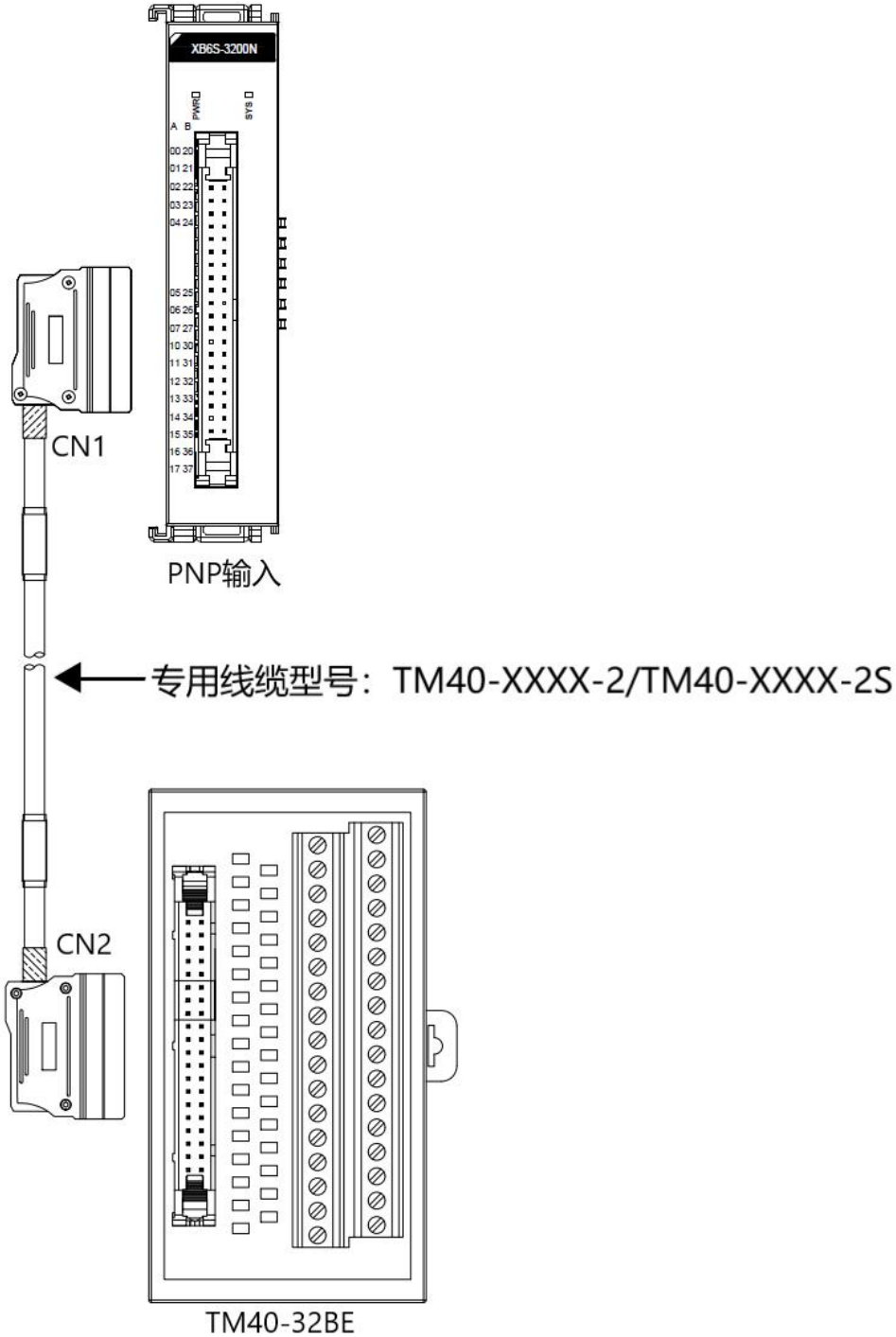

The cable is marked CN1 and CN2 at both ends. The I/O side is connected to the CN1 end, and the terminal block side is connected to the CN2 end.

 Copyright © 2024-2025 Nanjing Solidot Electronic Technology Co., Ltd.

6 use

6.1 IP settings and modifications

6.1.1 Set the IP address using the rotary switch.

For a detailed description and operating instructions of the rotary switch, please refer to [link/reference]. "3.1.2 Rotary Switch".

- **When setting the IP address from the factory default state via the rotary switch**
  The IP address is 192.168.1.XXX (XXX is the setting value of the rotary switch, ranging from 1 to 254).
- **When setting the IP address via a rotary switch from a state where the IP address has already been configured via the web.**
  The IP address is set via the Web, with the high 3 bytes and low 1 byte representing the rotary switch setting.
  For example, when changing the rotary switch settings after setting the URL to 172.10.0.12 via the web interface,
  The IP address is 172.10.0.XXX (XXX) which is the setting value (1~254) of the rotary switch.
- **Set IP address priority to higher than web settings via rotary switch.**
  1. When the rotary switch is set to 000, the IP value set in the Web configuration will be used.
  2. When the rotary switch is set to 001-254, the IP address set by the rotary switch shall prevail;
     The IP address set via the web will be stored at this time, and the IP address will still be based on the IP address set by the rotary switch.
     When the rotary switch is set to 000 or 255 again, after the module is powered on again, the stored IP address value will be used as the module IP address. If there is no stored value, the default value will be used as the module IP address.

 Copyright © 2024-2025 Nanjing Solidot Electronic Technology Co., Ltd.

6.1.2 Setting IP address via web

After configuring and connecting the coupler module to the system, you can access the web page by entering the coupler's IP address in the browser. In the network parameter configuration area, after modifying the IP address, click "Save and Restart", and the coupler will automatically restart and take effect.

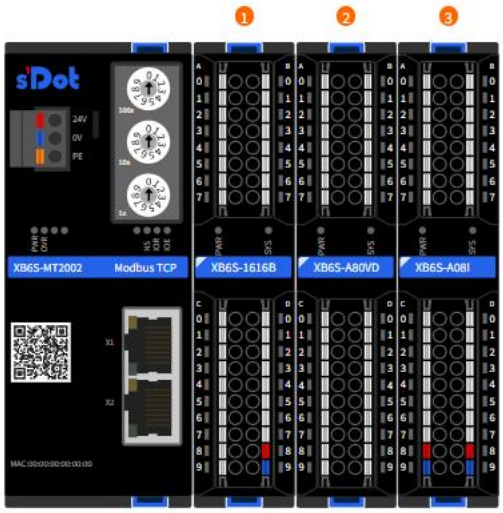

 Copyright © 2024-2025 Nanjing Solidot Electronic Technology Co., Ltd.

6.2 Factory reset

If the IP address is forgotten, lost, or other abnormalities occur during use, the module can be reset using the reset function.

After powering on the module, press and hold the reset button for 3 seconds until both the IOR and IOE lights on the coupler illuminate simultaneously and then turn off. If you see the IOR light flashing, the reset was successful. Refer to the section for the reset button location.3.1.1 Panel Structure".

The parameters for button reset are shown in the table below:

Button reset parameters	
IP	192.168.1.120
Default gateway	192.168.1.1
Subnet mask	255.255.255.0
Input cleared and retained (abnormal)	0 (0: clear; 1: keep)

 Copyright © 2024-2025 Nanjing Solidot Electronic Technology Co., Ltd.

6.3 Parameter Description

6.3.1 Digital input filtering

Digital input filtering prevents unexpected rapid changes in input signals from causing switch contact skipping or electrical noise. Digital input filtering supports single-module settings; each module can be configured independently, but individual channels cannot.

The default setting for the digital input filter FilterTime is 3ms, with supported settings of no filtering, 0.1ms, 0.2ms, 0.5ms, 1ms, 2ms, 3ms (factory setting), 4ms...18ms, 19ms, and 20ms. When configured to 3ms, noise within 3ms can be filtered out. A 3ms input filter time means that a single signal transitioning from "0" to "1" or from "1" to "0" must take 3ms to be detected; single high or low pulses shorter than 3ms will not be detected.

Function Description: When the input filter is configured to 1ms, noise within 1ms can be filtered out. As shown in the figure below, a signal input of 250us will be considered an invalid signal; single high or low pulses shorter than 1ms will not be detected; signals of 1ms and longer can be acquired.

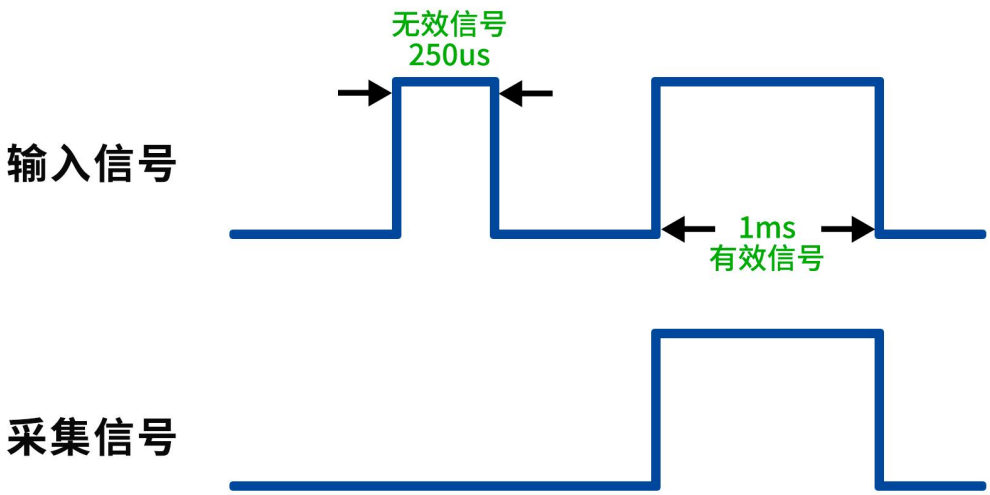

 Copyright © 2024-2025 Nanjing Solidot Electronic Technology Co., Ltd.

6.3.2 Clear/Hold digital output signal

The Clear/Hold function is for modules with output channels. This function configures the output mode of the output channels when the module is not in an OP state (stopped running/coupler network cable disconnected/X-bus offline). This parameter supports the following output states:

Clear output: When communication is disconnected, the module output channel will automatically clear the output, i.e., output 0.

Output valid value: When communication is disconnected, the module output channel continues to output a valid value, that is, output 1.

Retain the previous output value: When communication is disconnected, the module output channel retains the previous output value.

The digital clear and retain function supports both module-wide settings (template mode) and single-channel settings (single-channel mode). Any channel can be configured using either single-channel mode or template mode, with single-channel mode having higher priority than template mode. Specific configuration methods are shown in the table below; the default is module-wide clear output.

Clear and hold parameters of digital output module			
Parameter name	Parameter meaning	Parameter value meaning	default value
Set template	Full channel mode settings	Clear the output, i.e., output 0.	Clear output
		Output a valid value, i.e., output 1.	
		Keep the previous output value	
Exception settings	Single-channel mode settings	Follow the template value, i.e., do not enable single-channel mode.	Follow template value
		Clear the output, i.e., output 0.	
		Output a valid value, i.e., output 1.	
		Keep the previous output value	

6.3.3 Analog range settings

The Range Select setting is used to set the range of analog signals. Each channel can be configured individually (see details for range settings).3.3.4 and 3.3.5 Analog Parameters).

6.3.4 Analog input filtering

- **Analog input filtering function**

  The analog input filtering function can internally average the data after A/D conversion to reduce the impact of fluctuations in the input signal due to noise and other factors.

  The analog input is processed by moving average with a specified number of A/D conversions.

- **Filtering function configuration**

  Each channel can be configured individually, with a configuration range of 1 to 200, and a default of 10 times.

 Copyright © 2024-2025 Nanjing Solidot Electronic Technology Co., Ltd.

6.3.5 Analog output signal clear/hold

The Clear/Hold function is for modules with output channels. This function configures the output mode of the output channels when the module is not in an OP state (stopped running/coupler network cable disconnected/X-bus offline). This parameter supports the following output states:

Clear output: When communication is disconnected, the module output channel will automatically clear the output.

Maintain output: The module's output channel continues to output even when communication is interrupted.

Output preset value: When communication is disconnected, the module output channel outputs a preset value.

The analog output clear and hold function supports both module-wide settings (template mode) and single-channel settings (single-channel mode). Any channel can be configured using either single-channel mode or template mode, with single-channel mode having higher priority than template mode. Specific configuration methods are shown in the table below; the default is module-wide output clear.

Analog output module clear hold parameters			
Parameter name	Parameter meaning	Parameter value meaning	default value
Set template	Full channel mode settings	Clear, meaning clear all output channels.	Keep
		Maintain, meaning maintain output across all channels.	
		Preset value output, i.e., all channels output preset values.	
Exception settings	Single-channel mode settings	Follow the template value, i.e., do not enable single-channel mode.	Follow template value
		Channel clear, i.e., clearing the output of a single channel.	
		Channel hold, i.e., single-channel hold output.	
		Single-channel preset value, current/voltage value corresponding to the output code value (Corresponding range code value table)	

Note: When the overall module settings (template mode) are configured as preset, i.e., the preset values for all channels are in effect, the preset values are based on the preset code value of channel 0 in the single channel preset values, and all channels are output.

6.3.6 Analog signal power-off retention

The analog parameters support the function of saving all configuration parameters of the module when communication is interrupted due to abnormal power failure. Analog modules all support power failure saving by default.

 Copyright © 2024-2025 Nanjing Solidot Electronic Technology Co., Ltd.

6.3.7 Coupler parameters

6.3.7.1 IO communication exception configuration function

IO communication exception configuration parameters The X-bus interaction state can be configured when a communication failure occurs in a certain IO module during operation. The parameter can be configured to the following three states:

Abnormal and not interactive(Default state): When a module encounters an error, X-bus will no longer exchange process data. The original interaction can be resumed after the module error disappears.

stop communication When a module malfunctions, X-bus stops interacting. Even after the malfunction disappears, communication will not resume. A power cycle is required to restore the original interaction.

Interactive exceptions When a module malfunctions, all modules following the malfunctioning module are considered offline. Normal modules preceding the malfunctioning module can interact normally with X-bus, and X-bus can monitor these modules normally. Once the malfunctioning module recovers, the original interaction (soft hot-swap function) can be restored.

This manual uses a web application as an example to introduce the parameter configuration method of the XB6S-MT2002 coupler + I/O module combination. For detailed steps, please refer to [link/reference needed].Parameter settings in section 6.6.1After making the modifications, it is recommended to power on again.

 Copyright © 2024-2025 Nanjing Solidot Electronic Technology Co., Ltd.

6.4 Fault code information

6.4.1 Coupler general fault codes

category	serial number	Error Type	Error code	Event Name	Event Code (2#)	Event code (10#)	Event code (16#)	processing method
General Error	2	Online upgrade error	1	Firmware upgrade error	000000010000001	129	0x0081	Try upgrading again, check for environmental interference, and check if the firmware is too large, etc.
			2	Firmware is incompatible with the current module model.	0000000010000010	130	0x0082	Check if the files are correct, and whether there are any abnormalities or interferences in the modules.
	3	Voltage error	5	Load-side voltage not connected	0000000011000101	197	0x00C5	Check if the on-site power supply is connected.
	6	Channel error	4	overflowing from the channel	0000000110000100	388	0x0184	Check whether the input signal of the corresponding channel exceeds the measurement range and whether the output signal exceeds the configurable range.
	7	Parameter error	0	Parameter setting error	0000000111000000	448	0x01C0	Check module parameter settings
	63	X-bus communication error	1	X-bus initialization failed.	0000111111000001	4033	0x0FC1	Check if the module connection is normal.
			2	X-bus token timed out	0000111111000010	4034	0x0FC2	Check if the module has any abnormalities or interference.
			3	X-bus module disconnected	0000111111000011	4035	0x0FC3	Check if the module is online or experiencing

 Copyright © 2024-2025 Nanjing Solidot Electronic Technology Co., Ltd.

								interference, etc.
			4	CRC error in parsing data	0000111111000100	4036	0x0FC4	Check if the module has any abnormalities or interference.
			5	The X-bus module does not support abnormal interactive functionality.	0000111111000101	4037	0x0FC5	Upgrade module software version or disable abnormal interactive functions
Analog	1	XB6S-A 80TM	0	Disconnection	0010000001000000	8256	0x2040	Check if the wiring of the corresponding channel is normal.
gateway	0	XB6S-C01SP	0	General parameter error	0101000000000000	20480	0x5000	Check if any general parameters exceed parameter limits.
			1	Communication node parameter error	0101000000000001	20481	0x5001	Check whether the communication node format and node settings are consistent with the communication mode and control mode.
			2	Process data error	0101000000000010	20482	0x5002	After parameter configuration is complete and no other alarms are detected, the module will rescan after power-down and power-on.
			3	Modbus register mapping conflict	0101000000000011	20483	0x5003	Compare the starting address and length settings of each Modbus write command for communication node parameter 1 to see if they overlap.

Copyright © 2024-2025 Nanjing Solidot Electronic Technology Co., Ltd.

			4	Modbus node ID setting error	0101000000000100	20484	0x5004	Check if the slave ID range of communication node parameter 2 is between 1 and 247.

6.4.2 Fault Code Viewing

Taking CODESYS V3.5 software as an example, to check if the connected modules are abnormal, the host computer uses function code 0x03, with an offset starting address of 0x6000 and a length of 66, corresponding to 1 coupler + 32 modules. The order of the modules connected depends on the actual topology. Each module occupies four bytes: the first two bytes are the alarm code, and the last two bytes are the channel number (0xFF: channel-level event, 0x00: channel 0). For host computer configuration methods, please refer to [link/reference].6.6.2 Application in CODESYS V3.5 software environment.

6.5 Module function code mapping table

The MT coupler module supports a total of 9 function codes, the functions and meanings of which are shown in the table below:

function code	English meaning	Chinese meaning	Operation type
01	Read Coils	Read coil status	Bit operations
02	Read Discrete Inputs	Read discrete input state	Bit operations
03	Read Holding Registers	Read holding register	Word operations
04	Read Input Registers	Read input register	Word operations
05	Write Single Coil	Write a single coil	Bit operations
06	Write Single Register	Write a single holding register	Word operations
15	Write Multiple Coils	Write multiple coils	Bit operations
16	Write Multiple Registers	Write multiple holding registers	Word operations
twenty three	Read/Write Multiple Registers	Read/Write Multiple Holding Registers	Word operations

The function codes, offset start addresses, and address ranges corresponding to different I/O modules are shown in the table below:

I/O module address mapping table					
DI(Input Bit)	**DO**(Output bit)	**AI**(Input Word)	**AO**(Output Word)	**DI**(Input Word)	**DO**(Output Word)
Function: 0x02	**Function: 0x05**	**Function: 0x03**	**Function: 0x06**	**Function: 0x03**	**Function: 0x16**

 Copyright © 2024-2025 Nanjing Solidot Electronic Technology Co., Ltd.

	0x15 0x01(R)	0x04	0x16 0x03(R)		0x03(R)
Offset starting address: 0x00	Offset starting address: 0x00(R/W)	Offset starting address: 0x00	Offset starting address: hexadecimal:0x00(W) Decimal:0(W) hexadecimal:0x2000(R) Decimal:8192(R)	Offset starting address: hexadecimal:0x5000 Decimal:20480	Offset starting address: hexadecimal:0x3000(W) Decimal:12288(W) hexadecimal:0x4000(R) Decimal:16384(R)
Bit address range: 0~1023	Bit address range: 0~1023	Register address range:0~511	Register address range: 0x00~0x1FF(W) 0~511 (W) 0x2000~0x21FF(R) 8192~8703(R)	Register address range: 0x5000~0x507F 20480~20607	Register address range: 0x3000~0x307F(W) 12288~12415(W) 0x4000~0x407F(R) 16384~16511(R)
Data length range:1~1024	Data length range: 1~1024	Data length range:1~512	Data length range: 1~512	Data length range: 1~128	Data length range: 1~128
Offset address + length <= 1024(R)	Offset address + length <= 1024 (R/W)	Offset address + length <= 512 (R)	Offset address + length <= 512 (W), 8704 (R)	Offset address + length <= 20608(R)	Offset address + length <= 12416 (W), 16512 (R)

Note: The digital input (DI) and analog input (AI) modules support read functionality, while the digital output (DO) and analog output (AO) modules support write and readback functionality.

 Copyright © 2024-2025 Nanjing Solidot Electronic Technology Co., Ltd.

6.6 Modbus TCP coupler configuration application

6.6.1 Web applications

1、Preparation

- **Hardware environment**
  - **Module preparation: This guide uses the XB6S-MT2002+XB6S-1616B+XB6S-A80VD+XB6S-A08I topology as an example.**
  - **One computer, with its IP address and modules set to the same network segment.**

    Each coupler module is assigned a default IP address at the factory. The default IP addresses are typically as follows:

    IP address: 192.168.1.120

    Subnet mask: 255.255.255.0

    Gateway: 192.168.1.1
  - **Standard network cable**
  - **Module mounting rails and rail fasteners**
  - **One switching power supply**
- **Hardware configuration and wiring**

  Please follow the instructions.4. Installation and Removal"and"5-wire connection"Required Operation"
- **Module power-on**

  After verifying that the wiring is correct, power on the coupler module + I/O module device combination.

 Copyright © 2024-2025 Nanjing Solidot Electronic Technology Co., Ltd.

2、Accessing the Web via Browser

a. Open your browser and enter the coupler's IP address in the URL to access the website, as shown in the image below. The web homepage mainly consists of three functional areas: ① menu bar, ② module configuration overview, and ③ network parameter configuration.

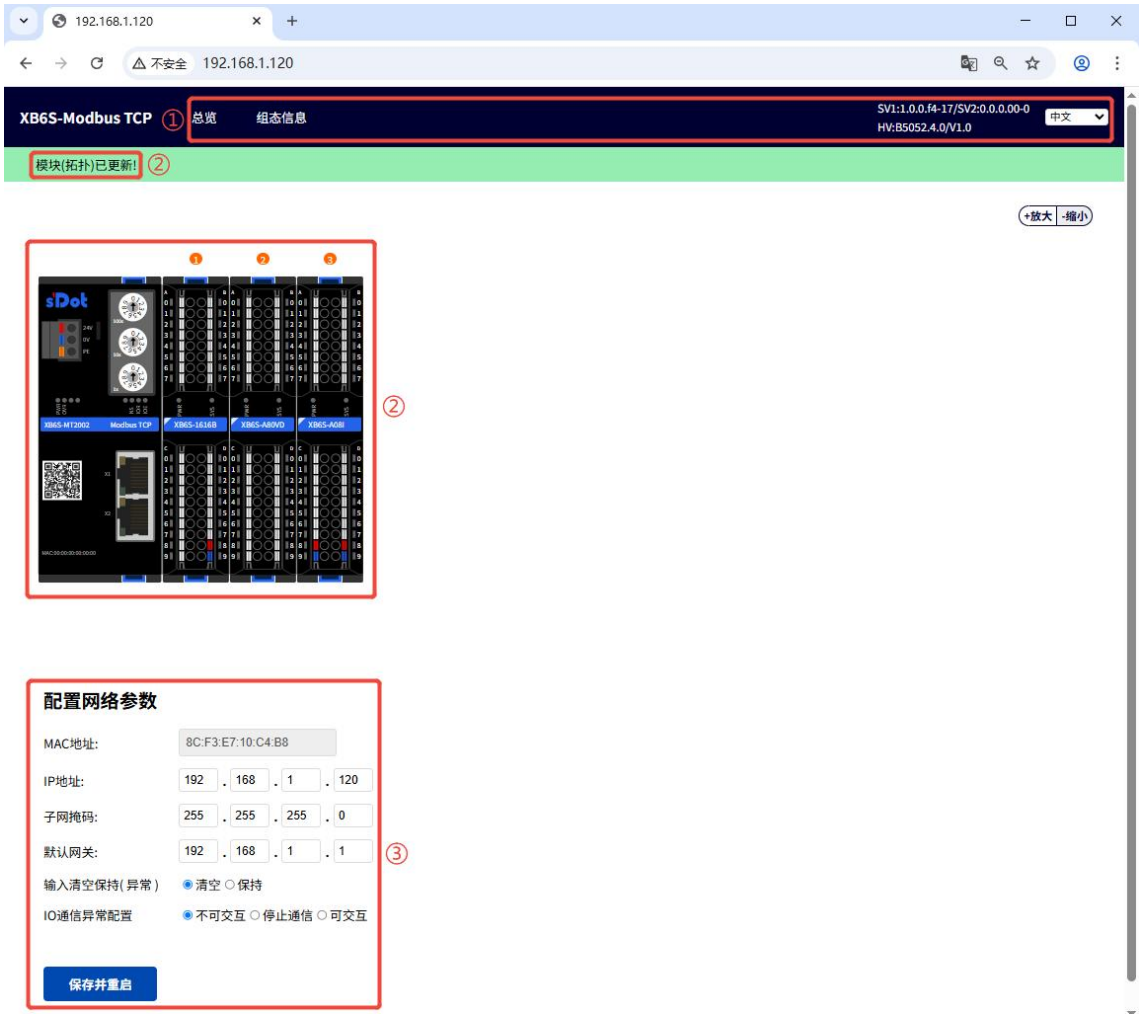

Copyright © 2024-2025 Nanjing Solidot Electronic Technology Co., Ltd.

b. The menu bar includes configuration overview, configuration information viewing, coupler hardware and software version viewing, and web page language switching functions, as shown in the figure below. It displays coupler software version SV1 information and hardware version HV information; the web page supports five languages: Chinese, English, German, Korean, and Japanese.

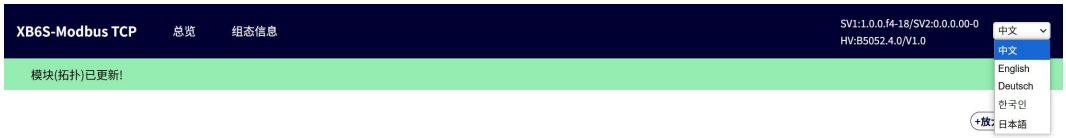

3、Configure network parameters, input clear and hold (abnormal) function, and IO communication abnormal configuration function.

a. You can find the function to configure network parameters at the bottom of the web homepage, as shown in the image below.

- The MAC address in the network parameters is consistent with the silkscreen markings on the XB6S-MT2002 coupler panel.MACSame addressMACThe address cannot be changed.
- After changing the IP address, subnet mask, default gateway, input clear/hold (abnormal) function, and IO communication abnormal configuration function, you need to click "Save and Restart" for the coupler to automatically restart and take effect. The input clear/hold function means that input data can be configured to be cleared or held in abnormal situations.

 Copyright © 2024-2025 Nanjing Solidot Electronic Technology Co., Ltd.

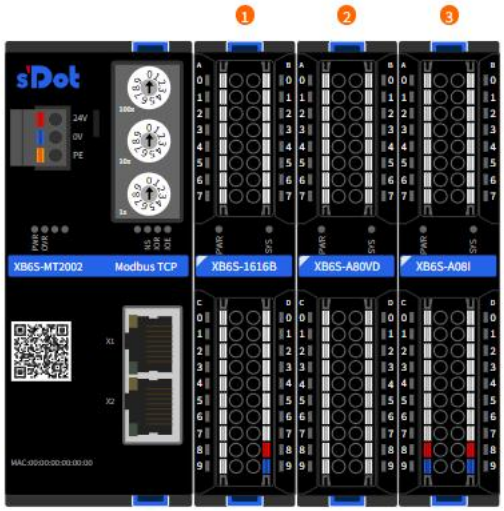

配置网络参数

MAC地址:	8C:F3:E7:10:C4:B8
IP地址:	192 . 168 . 1 . 120
子网掩码:	255 . 255 . 255 . 0
默认网关:	192 . 168 . 1 . 1
输入清空保持(异常)	◉清空 ○保持
IO通信异常配置	◉不可交互 ○停止通信 ○可交互

保存并重启

Copyright © 2024-2025 Nanjing Solidot Electronic Technology Co., Ltd.

4、Module Configuration Overview

a. On the Web homepage, you can see the module configuration diagram, as shown in the figure below. The channel Indicators of the I/O modules and function modules display the valid I/O input and output data in real time. When the system topology changes, such as adding or removing modules or changing the module topology order, the Web will automatically update the configuration overview after power-on and successful connection. After the update is complete, the upper left corner will display "Module (Topology) updated!".

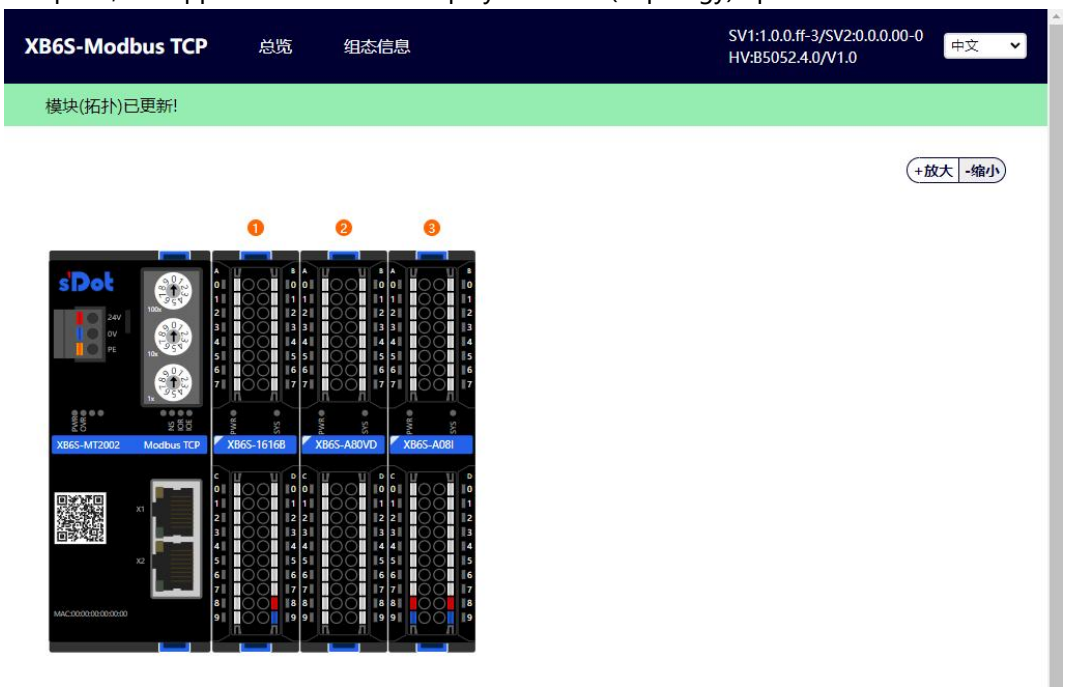

 Copyright © 2024-2025 Nanjing Solidot Electronic Technology Co., Ltd.

b. On the module configuration overview page, you can click on a specific I/O module to enter its configuration monitoring page. For example, to configure the XB6S-1616B, click on the module to enter the configuration monitoring page. On the configuration monitoring page, you can configure digital input filtering and output signal clear/hold functions. After configuring the input filtering time, click "Submit," as shown in the figure below.

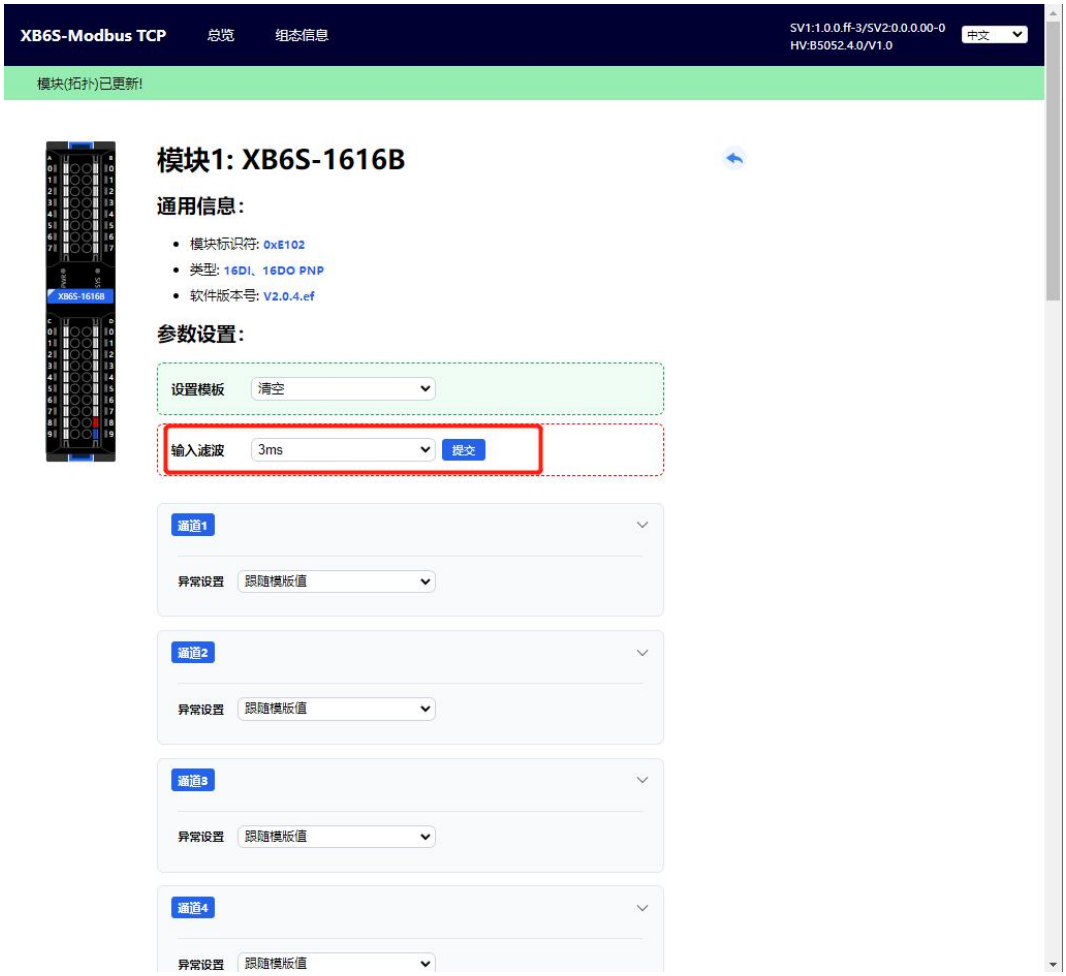

 Copyright © 2024-2025 Nanjing Solidot Electronic Technology Co., Ltd.

c. The digital output signal clear/hold function is preset to output clear mode for all channels by default. Module channels can be configured individually; see the corresponding relationship below.6.3.2 Clearing/Holding Digital Output SignalsAfter configuration, click "Submit", as shown in the image below.

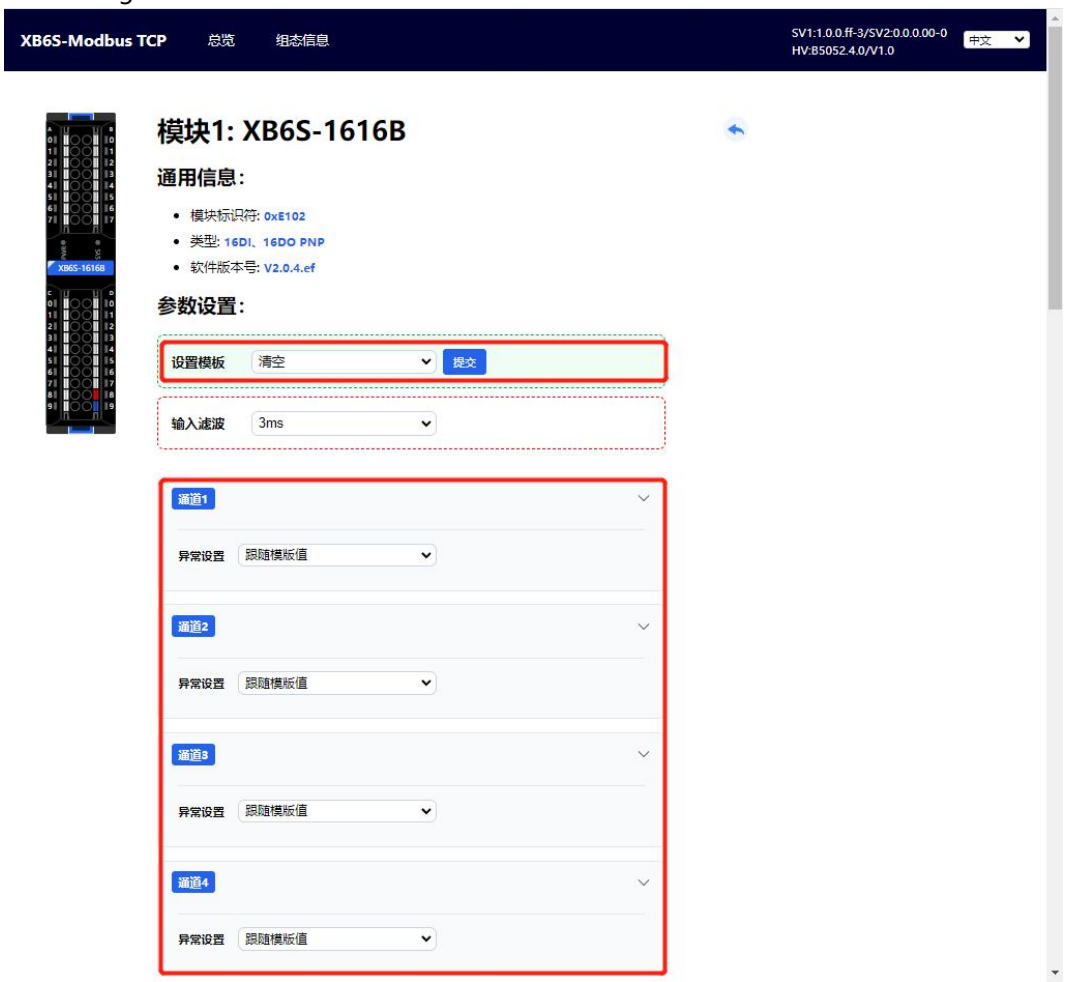

 Copyright © 2024-2025 Nanjing Solidot Electronic Technology Co., Ltd.

d. Simultaneously, the module input status can be monitored in real time by inputting channel values and checking the Indicators. Note: When the coupler and master station (PLC) establish a connection and exchange process data, module parameters cannot be configured; attempting to configure them will return an error.

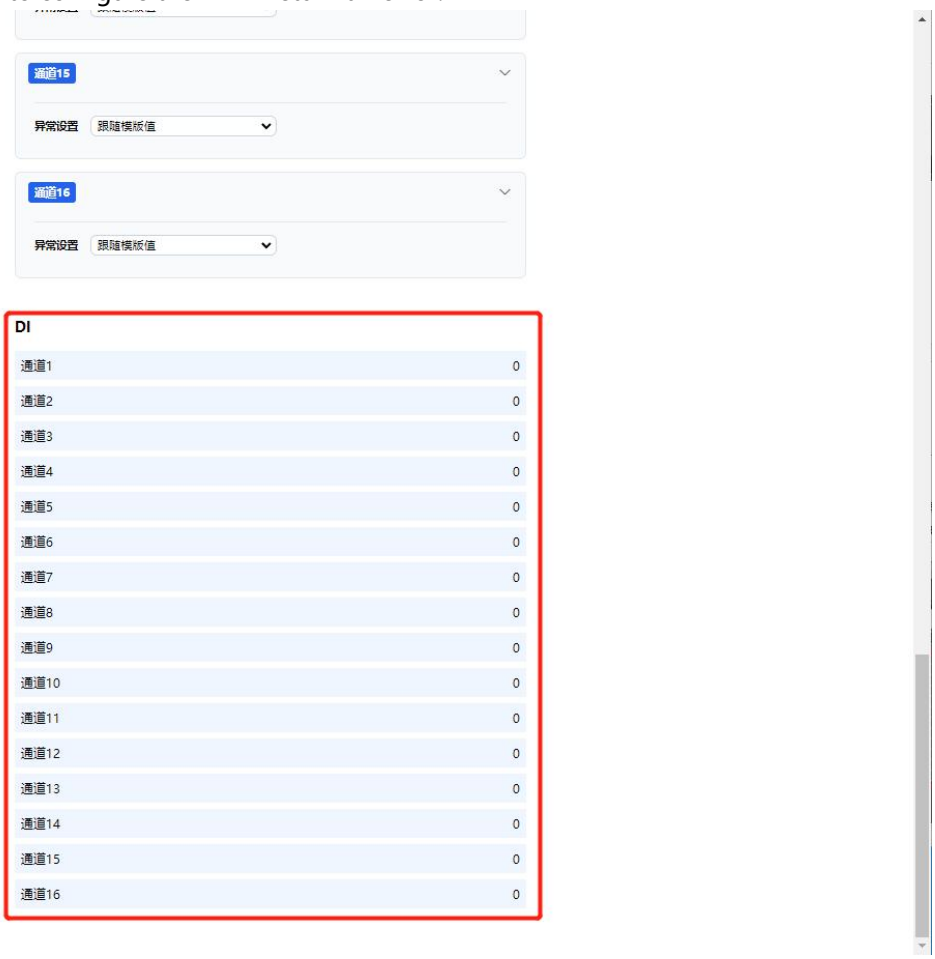

 Copyright © 2024-2025 Nanjing Solidot Electronic Technology Co., Ltd.

e. On the module configuration overview page, click "XB6S-A80VD" to enter the analog voltage input module configuration and monitoring page, as shown in the figure below. On the configuration and monitoring page, you can configure the analog voltage range and analog input filtering parameters. After configuration, click "Submit". The module channel status can be monitored in real time through the module Indicators.

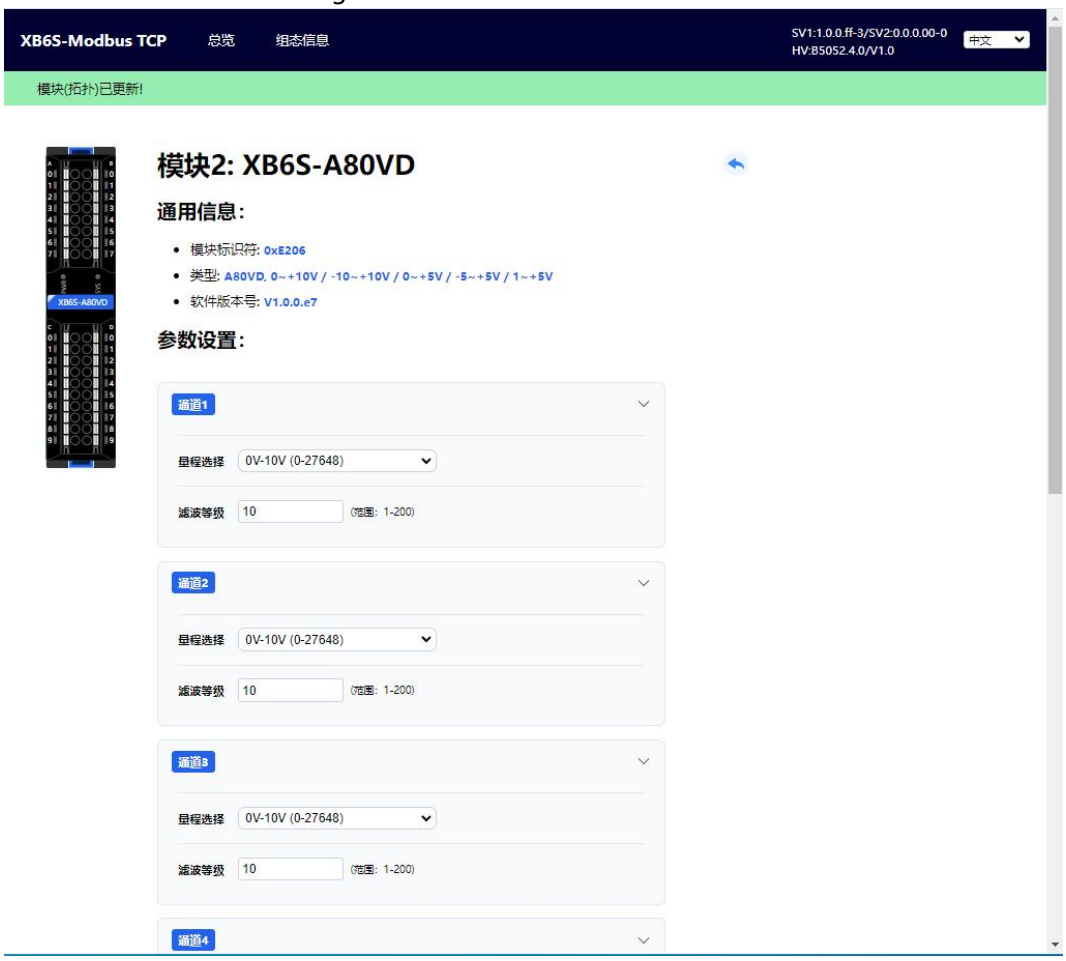

 Copyright © 2024-2025 Nanjing Solidot Electronic Technology Co., Ltd.

f. On the module configuration overview page, click "XB6S-A08I" to enter the analog current output module configuration and monitoring page. On the configuration and monitoring page, you can configure the analog current range and the analog output signal clear/hold parameters. Configure the analog current range for each channel individually. After configuration, click "Submit," as shown in the figure below.

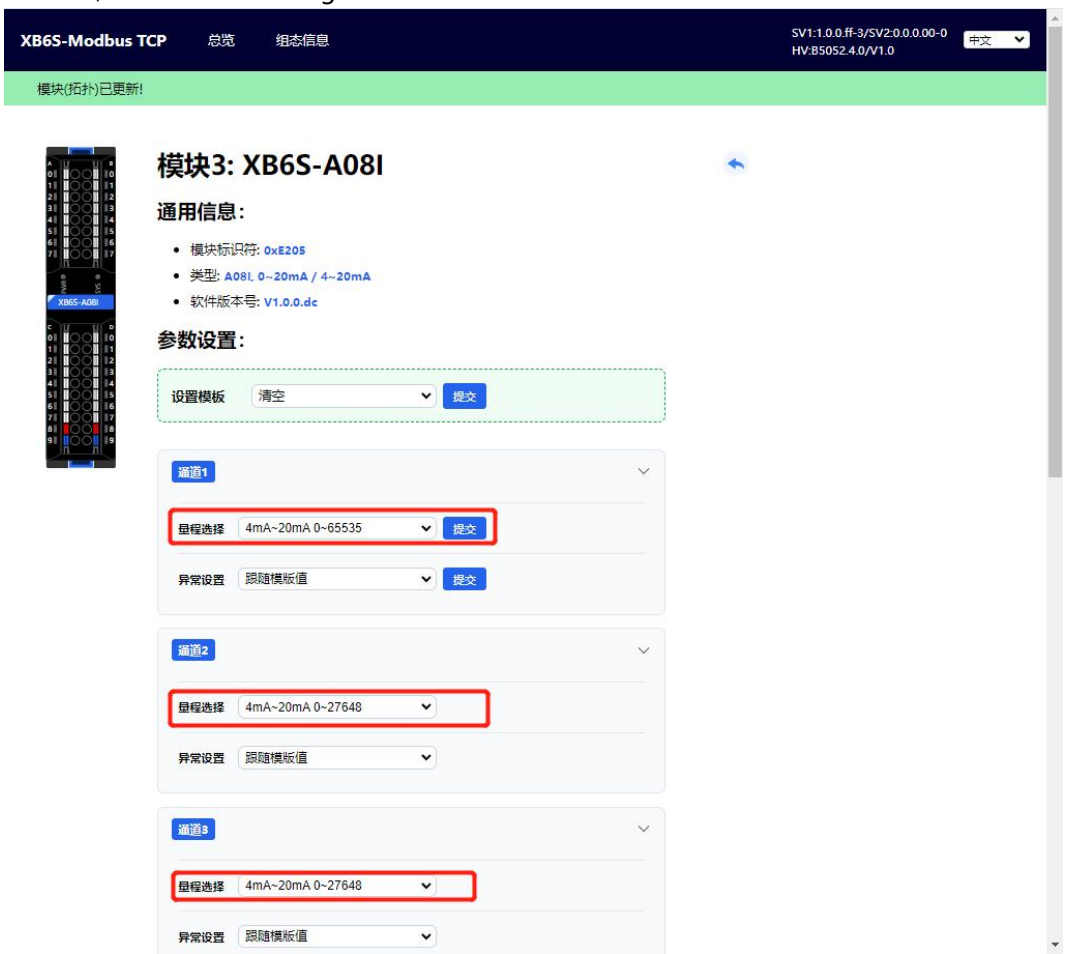

 Copyright © 2024-2025 Nanjing Solidot Electronic Technology Co., Ltd.

g. Analog output signal clear/hold function. By default, all channels are in output clear mode. Module channels can be configured individually; see the corresponding relationship. 6.3.5 Clearing/Holding Analog Output SignalsAfter configuration, click "Submit", as shown in the image below.

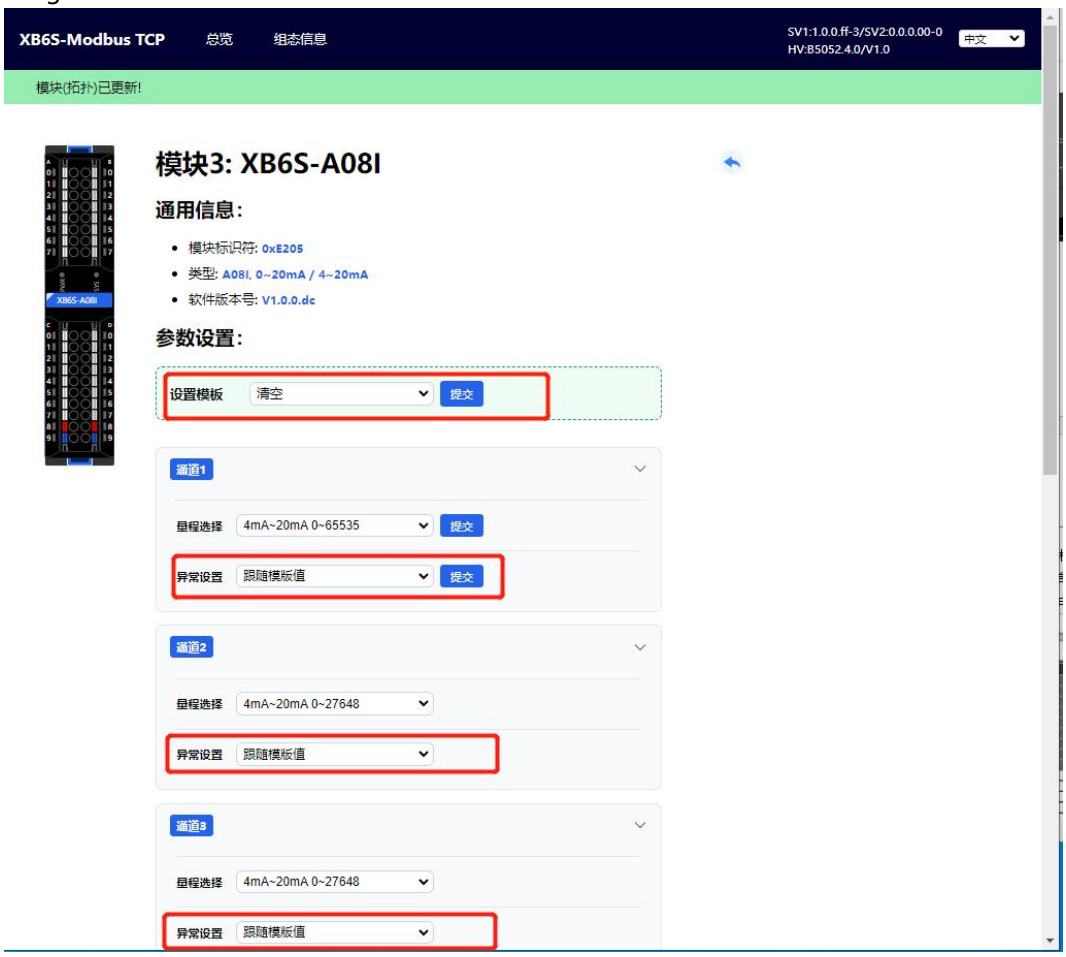

 Copyright © 2024-2025 Nanjing Solidot Electronic Technology Co., Ltd.

5、Configuration information and I/O address mapping table

a. Click "Configuration Information" in the Web menu bar to switch to the Configuration Information page, as shown in the figure below. On the Configuration Information page, you can view the current module's access information and I/O address mapping table. Users can clearly and quickly operate the module through the host computer or PLC based on the I/O address mapping table.

组态信息		接入模块总个数：3		功能码：01、02、03、04、05、06、15、16、23			
序列	型号	IO模块地址映射表					
		DI(Input Bit)	DO(Output Bit)	AI(Input Word)	AO(Output Word)	DI(Input Word)	DO(Output Word)
		Function: 0x02 Addr:0x00 (R)	Function: 0x05 0x15 0x01 (R) Addr:0x00 (R/W)	Function: 0x03 0x04 Addr:0x00 (R)	Function: 0x06 0x16 0x03 (R) Addr:0x00 (W) Addr:0x2000 (R)	Function: 0x03 Addr:0x5000 (R)	Function: 0x16 0x03 (R) Addr:0x3000 (W) Addr:0x4000 (R)
0	XB6S-MT2002						
1	XB6S-1616B	0-15	0-15			0	0
2	XB6S-A80VD			0-7			
3	XB6S-A08I				0-7		

Copyright © 2024-2025 Nanjing Solidot Electronic Technology Co., Ltd.

6、Slave module access anomaly alarm

a. The web page now includes an alarm function, provided that the coupler and the host computer software are in a connected communication state. When a module connected to the coupler malfunctions, the page will display the message "Slave module malfunction," as shown in the image below. When a slave module malfunctions, the output channel retains its original output state, while the input channel can be configured to be cleared or kept in its current state.

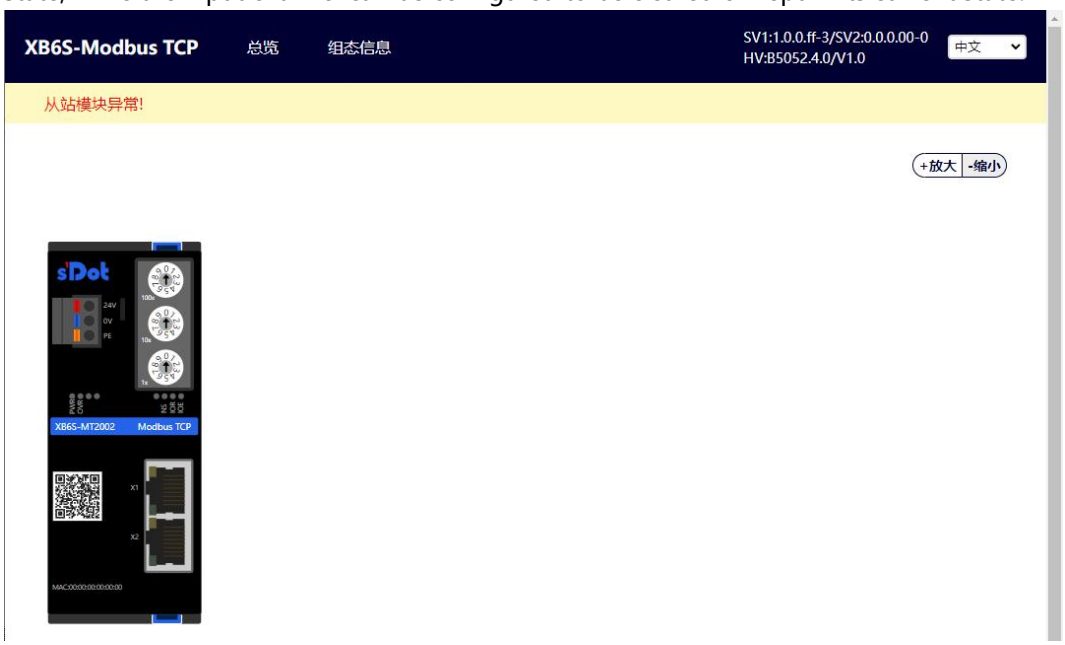

 Copyright © 2024-2025 Nanjing Solidot Electronic Technology Co., Ltd.

6.6.2 Application in CODESYS V3.5 software environment

1、Preparation

- **Hardware environment**
  - **Module preparation: This guide uses the XB6S-MT2002+XB6S-1616B+XB6S-A80VD+XB6S-A08I topology as an example.**
  - **One computer, pre-installed with CODESYS V3.5 and CODESYS Control Win V3 - x64 SysTray software.**
  - **One computer, with its IP address and modules set to the same network segment.**
    Each coupler module is assigned a default IP address at the factory. The default IP addresses are typically as follows:
    IP address: 192.168.1.120
    Subnet mask: 255.255.255.0
    Gateway: 192.168.1.1
  - **Standard network cable**
  - **Module mounting rails and rail fasteners**
  - **One switching power supply**
- **Hardware configuration and wiring**

Please follow the instructions.4. Installation and Removal"and"5-wire connection"Required Operation"

- **Module power-on**

After verifying that the wiring is correct, power on the coupler module + I/O module device combination.

2、New construction projects

a. Log in to CODESYS, click "File -> New Project", enter a name, and click "OK", as shown in the figure below.

 Copyright © 2024-2025 Nanjing Solidot Electronic Technology Co., Ltd.

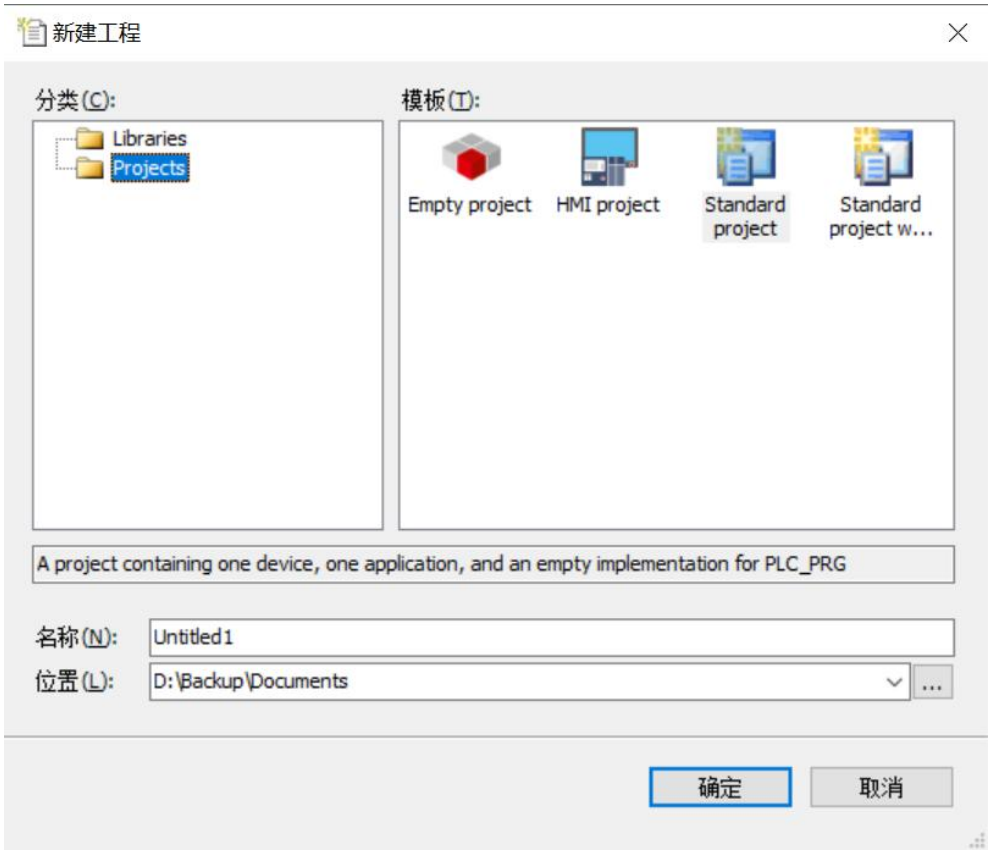

 Copyright © 2024-2025 Nanjing Solidot Electronic Technology Co., Ltd.

3、Scanning Network

a. To start the PLC, use "CODESYS Control Win V3 - x64 SysTray". Locate "CODESYS Control Win V3 - x64 SysTray" in the lower right corner of your computer, right-click and select "Start PLC".

b. Double-click "Device (CODESYS Control Win V3 X64)" in the left navigation tree of CODESYS, and then click "Scan Network".

c. Select the device and choose the correct controller network path, as shown in the figure below.

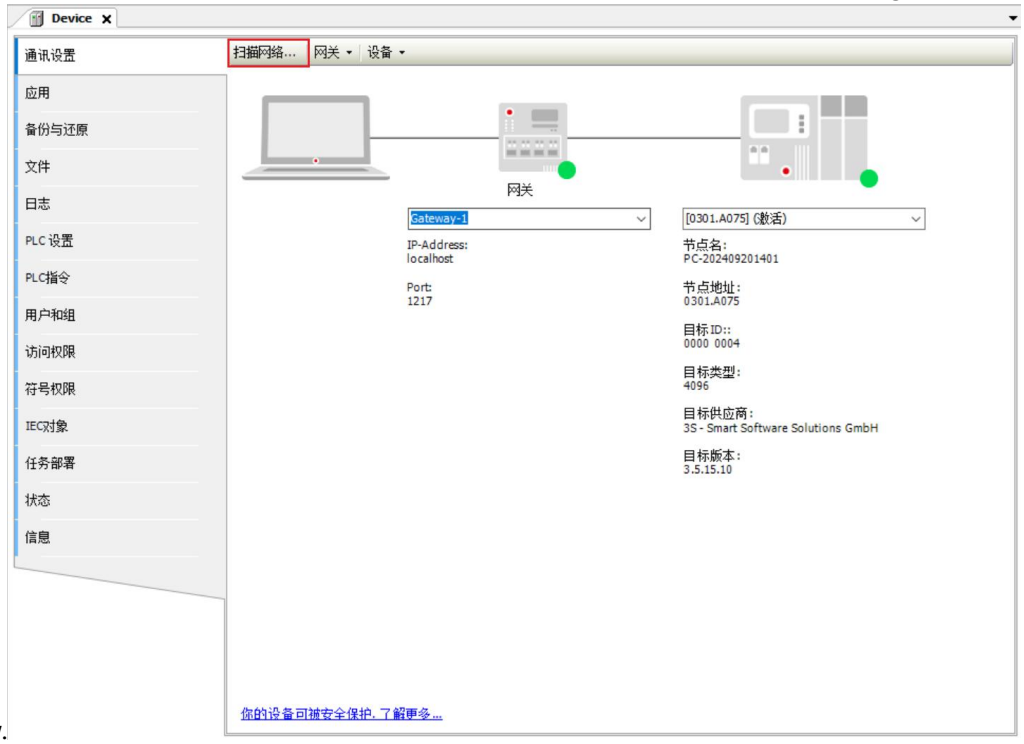

4、Add Ethernet

a. Right-click "Device (CODESYS Control Win V3 X64)" in the left navigation tree of CODESYS, click "Add Device", and select...Add the Ethernet adapter by going to "Ethernet adapter -> Ethernet"

Copyright © 2024-2025 Nanjing Solidot Electronic Technology Co., Ltd.

as shown in the image below.

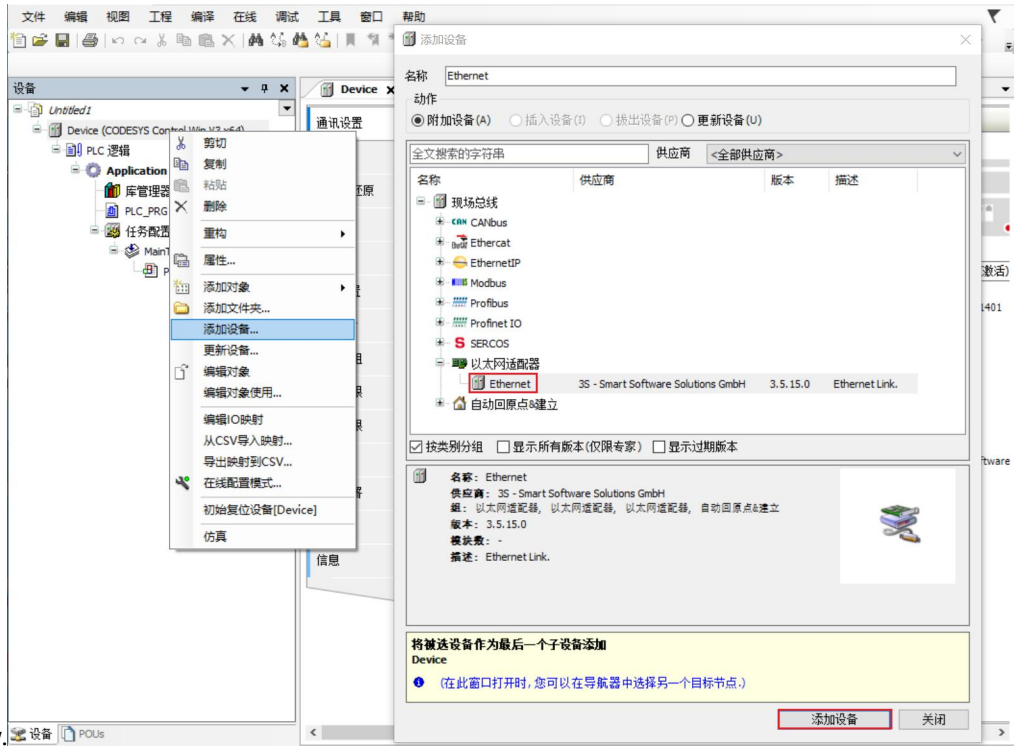

5、Configure Ethernet network parameters

a. Double-click "Ethernet (Ethernet)" in the left navigation tree to open the main menu on the right, then click..."..." Open the network adapter window, select Ethernet, and the master station IP and coupler IP must be in the same network segment, as shown in the figure below.

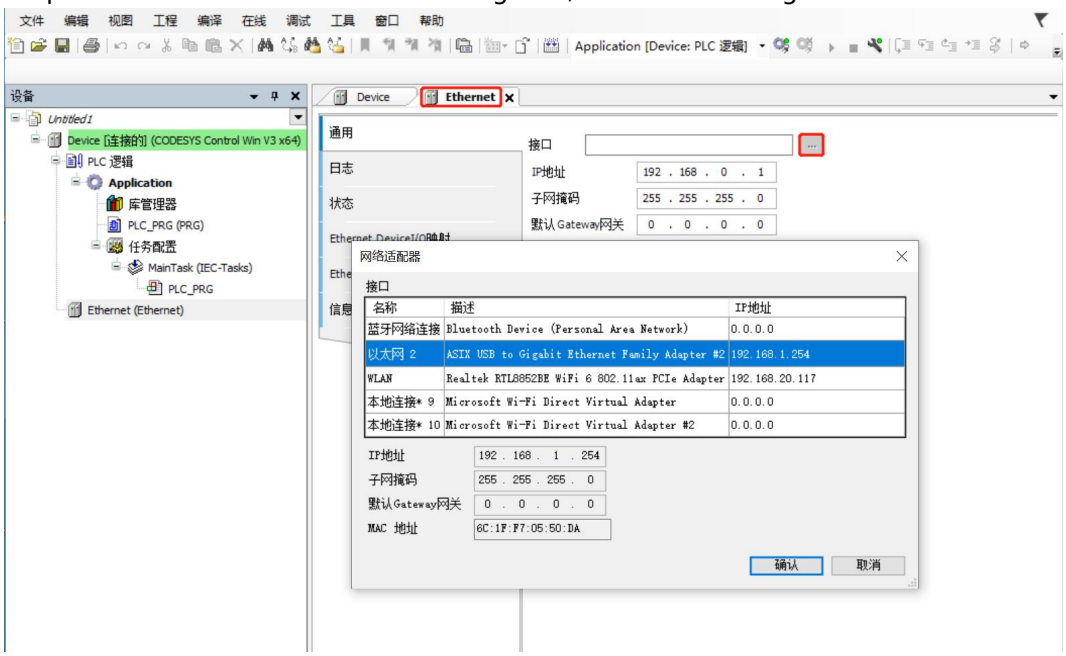

6、Add Modbus TCP Master and Modbus TCP Slave

a. Right-click "Ethernet (Ethernet)" in the left navigation tree, click "Add Device", and select...Add "Modbus TCP Master" as shown in the image

 Copyright © 2024-2025 Nanjing Solidot Electronic Technology Co., Ltd.

below.

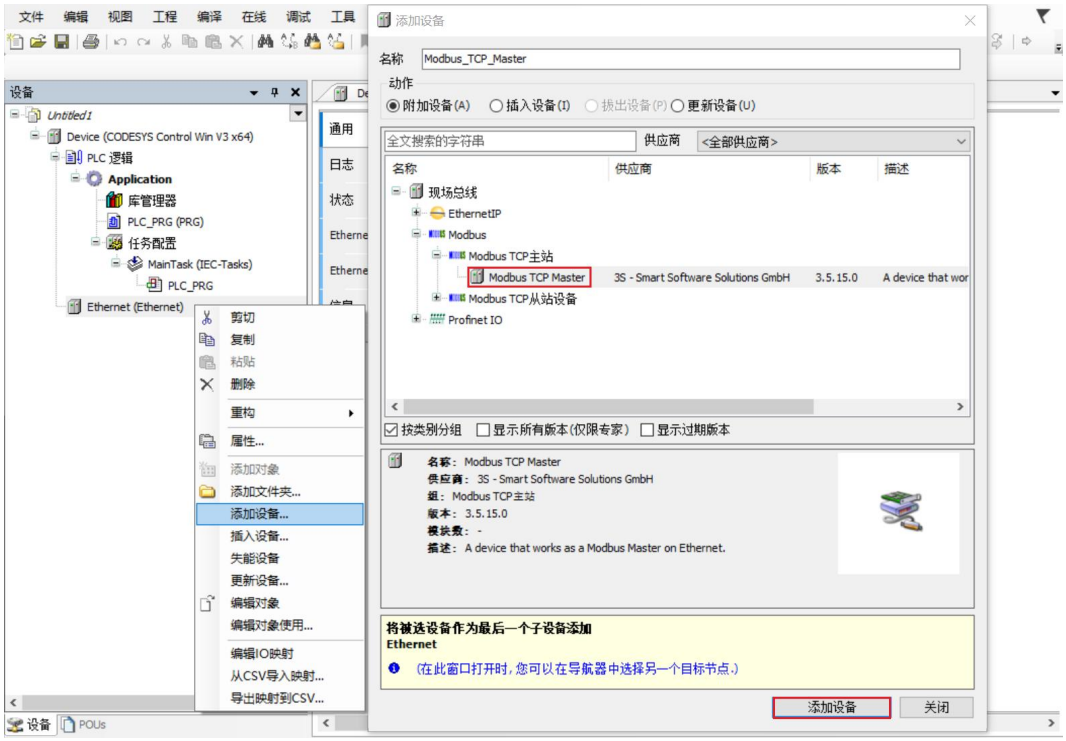

 Copyright © 2024-2025 Nanjing Solidot Electronic Technology Co., Ltd.

b. Right-click "Modbus TCP Master" in the left navigation tree, click "Add Device", and select...Add “Modbus TCP Slave” as shown in the image below.

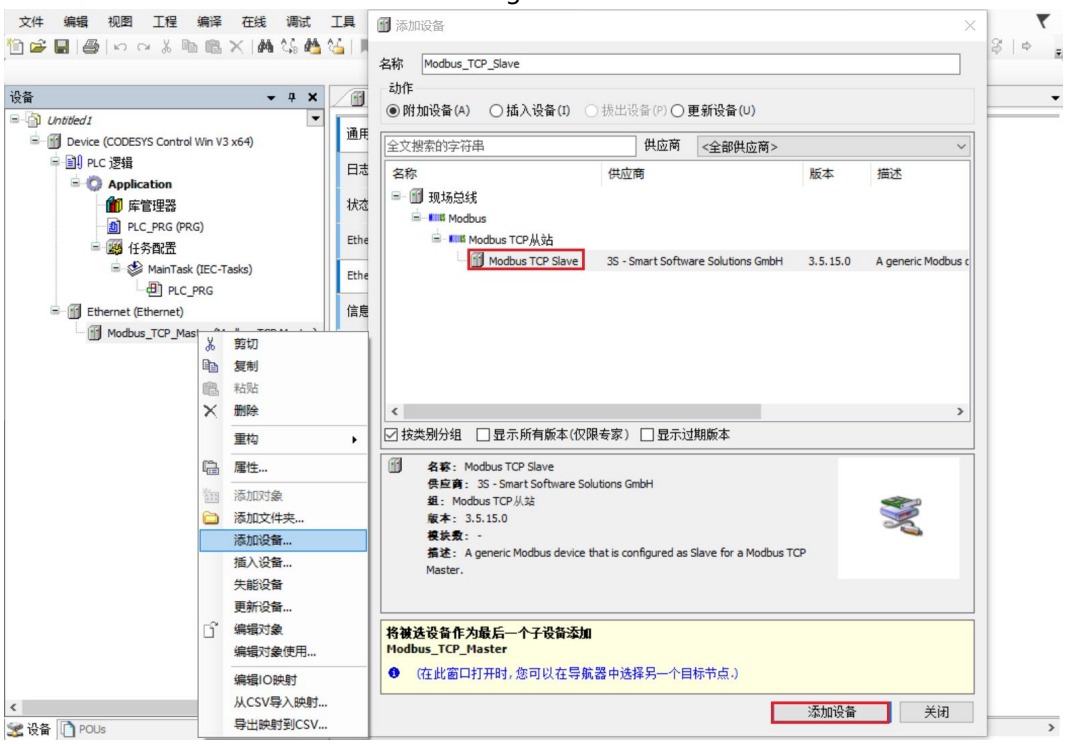

c. Double-click in the left navigation treeOpen the main menu on the right side under “Modbus TCP Slave”, click “General” to configure Modbus TCP Slave, set the IP address to the coupler’s IP address, the response time to “1000”, and the port number to “502”, as shown in the figure below.

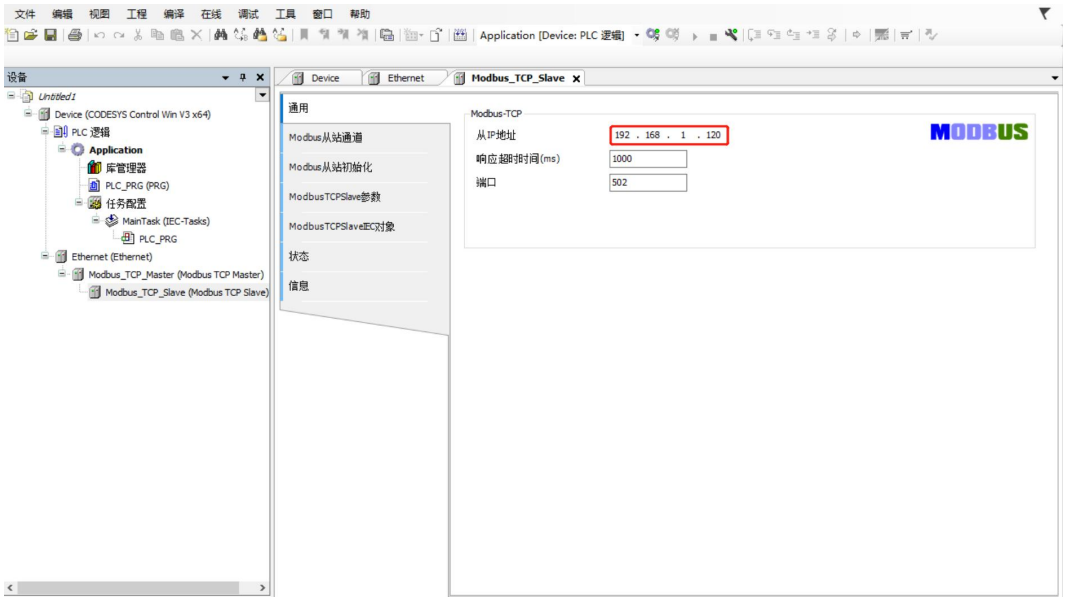

 Copyright © 2024-2025 Nanjing Solidot Electronic Technology Co., Ltd.

7、Configure the slave station's IO channel

a. Using web tools, you can view the IO module address mapping table of the topology, and see the function code, offset start address and monitoring address range corresponding to each module, as shown in the figure below.

组态信息		接入模块总个数：3		功能码：01、02、03、04、05、06、15、16、23			
序列	型号	IO模块地址映射表					
		DI(Input Bit)	DO(Output Bit)	AI(Input Word)	AO(Output Word)	DI(Input Word)	DO(Output Word)
		Function: 0x02 Addr:0x00 (R)	Function: 0x05 0x15 0x01 (R) Addr:0x00 (R/W)	Function: 0x03 0x04 Addr:0x00 (R)	Function: 0x06 0x16 0x03 (R) Addr:0x00 (W) Addr:0x2000 (R)	Function: 0x03 Addr:0x5000 (R)	Function: 0x16 0x03 (R) Addr:0x3000 (W) Addr:0x4000 (R)
0	XB6S-MT2002						
1	XB6S-1616B	0-15	0-15			0	0
2	XB6S-A80VD			0-7			
3	XB6S-A08I				0-7		

b. On the right-hand main page of Modbus TCP Slave, click "Modbus Slave Channel", then click "Add Channel" to bring up the Channel 0 configuration window, as shown in the figure below.

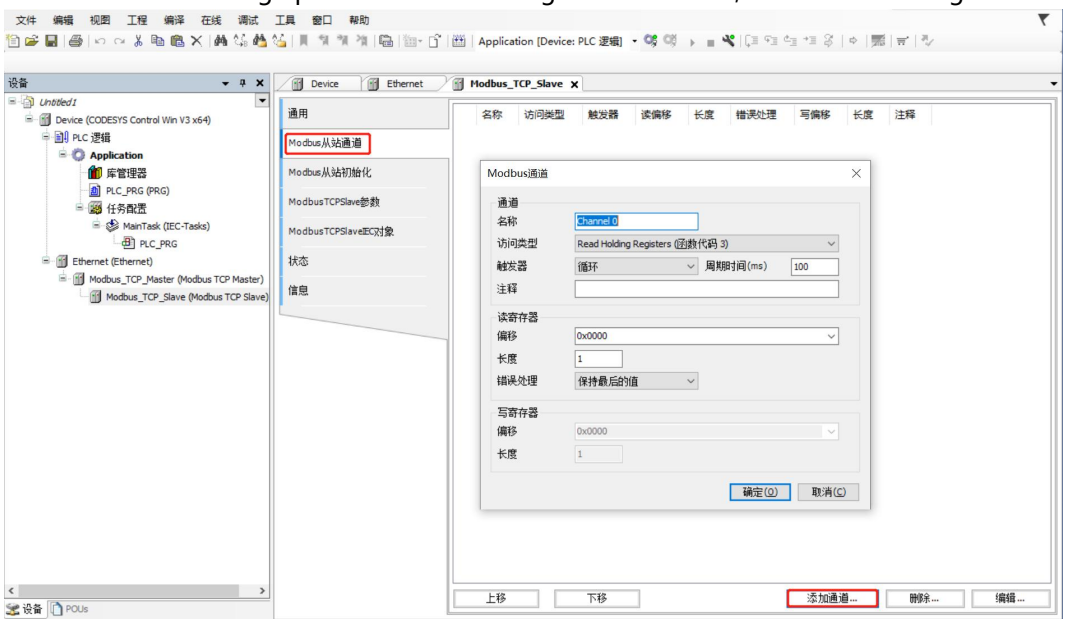

Copyright © 2024-2025 Nanjing Solidot Electronic Technology Co., Ltd.

c. XB6S-1616B module**DI (Input Bit)**The corresponding function code is 02, the offset address is 0x00, and the address range is 0~15, i.e., 16 bits. In the Channel 0 configuration window, the access type (function code) is 02 Read Discrete Inputs, the read register offset is 0, and the length is 16. After setting, click "OK," as shown in the figure below. (Alternatively, you can customize the offset address and length according to the IO module address mapping table as needed.)

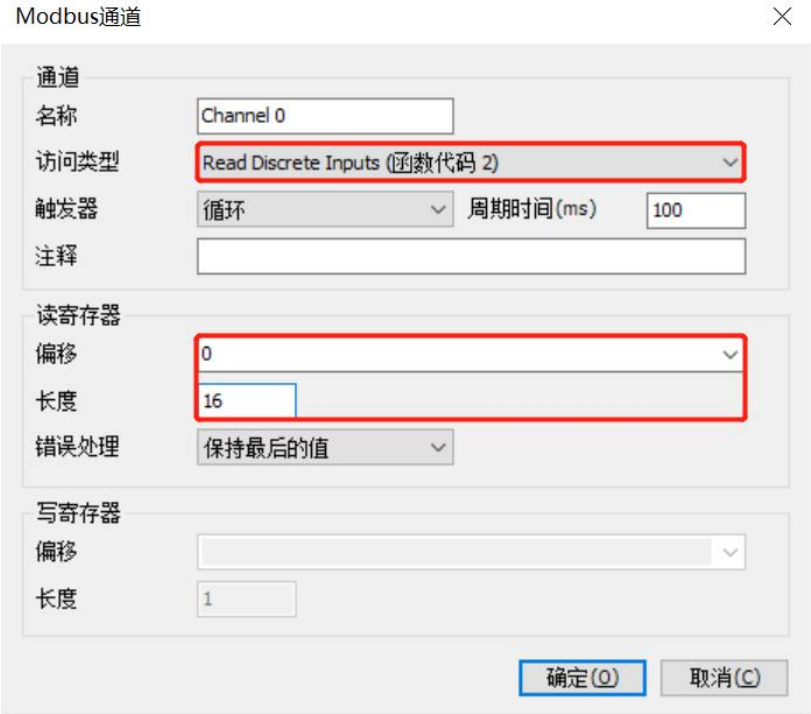

d. The write function code corresponding to the DO (Output Word) of the XB6S-1616B module is 16, the offset address is 0x3000 (decimal: 12288), and the address range is 0, which is 1 Word. On the main page on the right side of Modbus TCP Slave, click "Add Channel" to bring up the Channel 1 configuration window.
In the Channel 1 configuration window, the access type is...The function code is 16 Write Multiple Registers, the write register offset is 12288, and the length is 1. After setting, click "OK", as shown in the figure below.

 Copyright © 2024-2025 Nanjing Solidot Electronic Technology Co., Ltd.

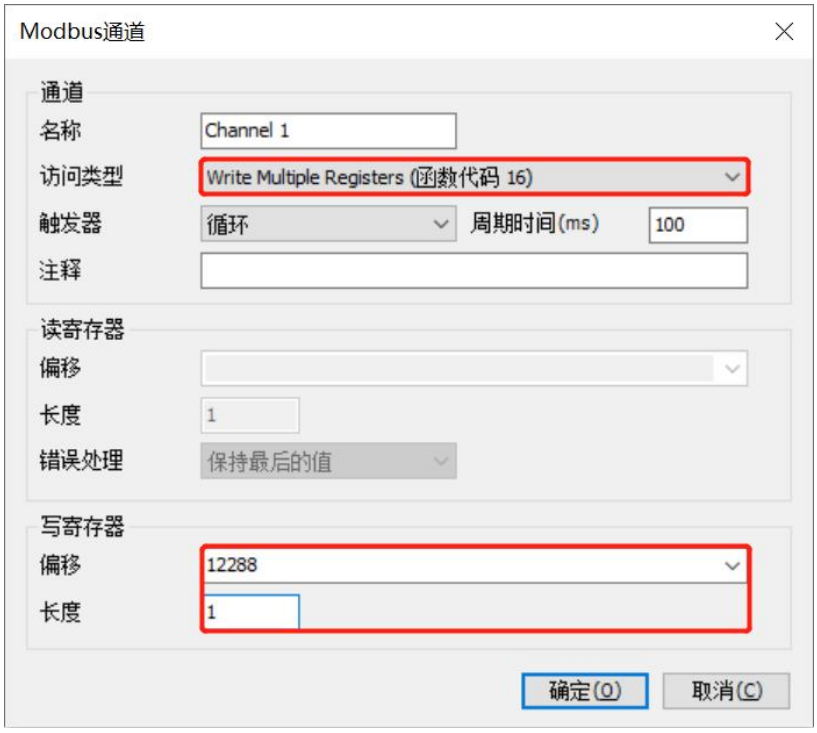

e. The function codes for the AI (Input Word) of the XB6S-A80VD module are 03 and 04, the offset address is 0x00, and the address range is 0~7, i.e., 8 words. On the main page on the right side of the Modbus TCP Slave, click "Add Channel" to bring up the Channel 2 configuration window.

In the Channel 2 configuration window, the access type is...The function codes are 03 Read Holding Registers and 04 Read Input Registers (choose one), the read register offset is 0, and the length is 8. After setting, click "OK", as shown in the figure below.

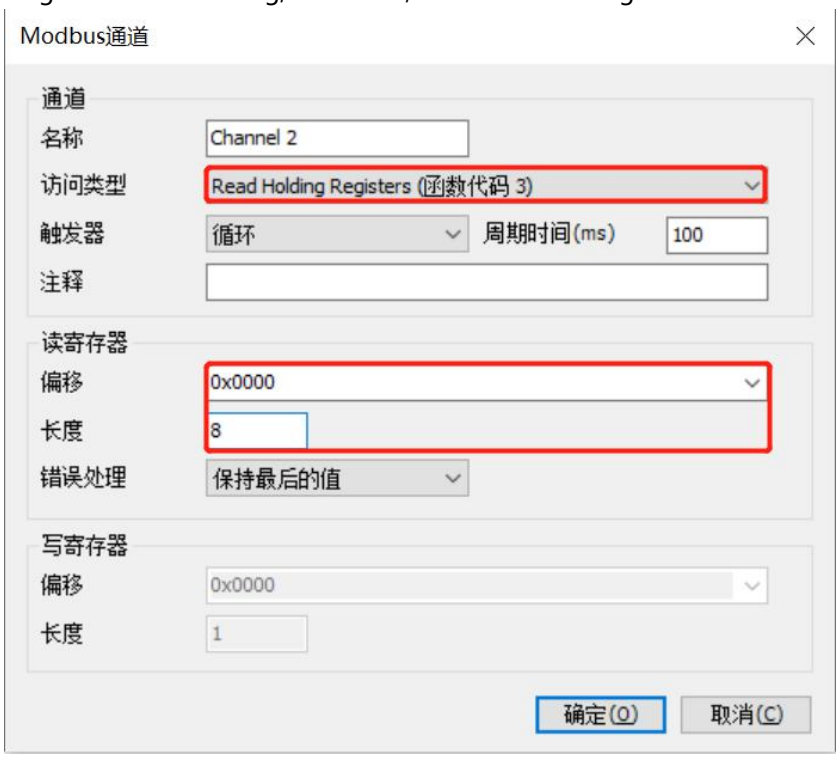

 Copyright © 2024-2025 Nanjing Solidot Electronic Technology Co., Ltd.

f. The function code corresponding to the AO (Output Word) of the XB6S-A08I module is 16, the offset address is 0x00, and the address range is 0~7, i.e., 8 Words. On the main page on the right side of the Modbus TCP Slave, clicking "Add Channel" will bring up the Channel 3 configuration window.
In the Channel 3 configuration window, the access type is...The function code is 16 Write Multiple Registers, the register offset is 0, and the length is 8. After setting, click "OK", as shown in the figure below.

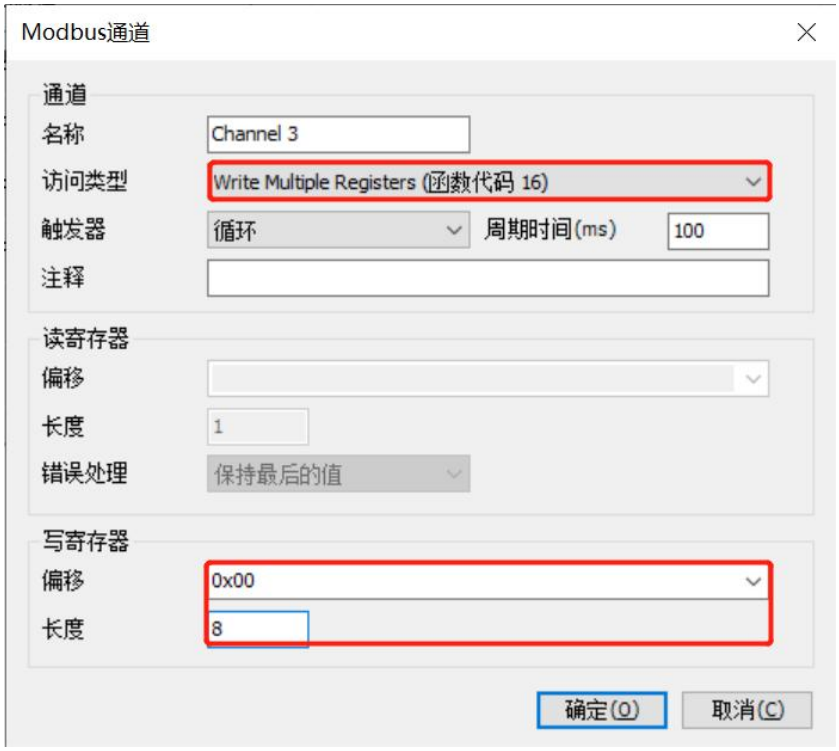

g. Digital output module XB6S-1616B,**DO (Output Word)**The function code corresponding to the readback function is 03, the offset address is 0x4000 (decimal: 16384), and the address range is 0, i.e., 1 Word. On the main page on the right side of Modbus TCP Slave, click "Add Channel" to bring up the Channel 4 configuration window.
In the Channel 4 configuration window, the access type (function code) is 03 Read Holding Registers, the write register offset is 16384, and the length is 1. After setting, click "OK", as shown in the figure below.

 Copyright © 2024-2025 Nanjing Solidot Electronic Technology Co., Ltd.

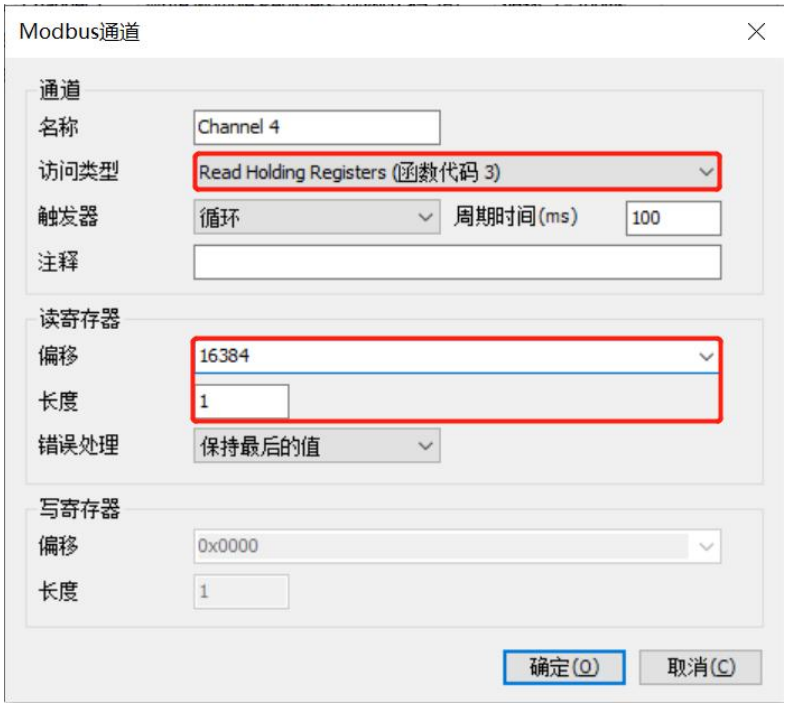

h. XB6S-A08I module**AO (Output Word)**The function code corresponding to the readback function is 03, the offset address is 0x2000 (decimal: 8192), and the address range is 0~7, i.e., 8 Words. On the main page on the right side of Modbus TCP Slave, click "Add Channel" to bring up the Channel 5 configuration window.
In the Channel 5 configuration window, the access type (function code) is 03 Read Holding Registers, the write register offset is 8192, and the length is 8. After setting, click "OK", as shown in the figure below.

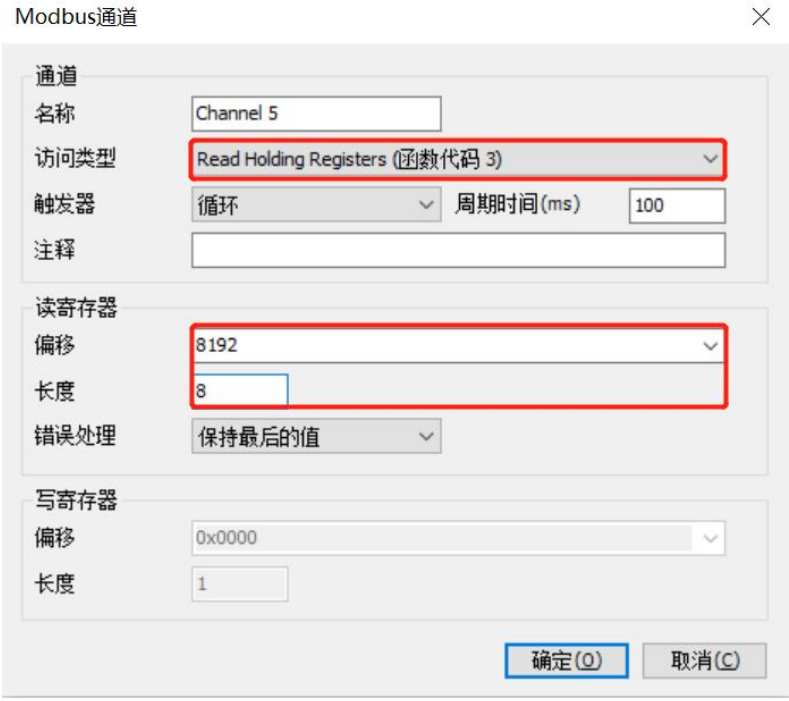

i. The monitoring functions for other modules follow the same principle. After configuration, you can view the configuration information on the Modbus slave channel main page, and you can also add, delete, and edit it, as shown in the figure below.

 Copyright © 2024-2025 Nanjing Solidot Electronic Technology Co., Ltd.

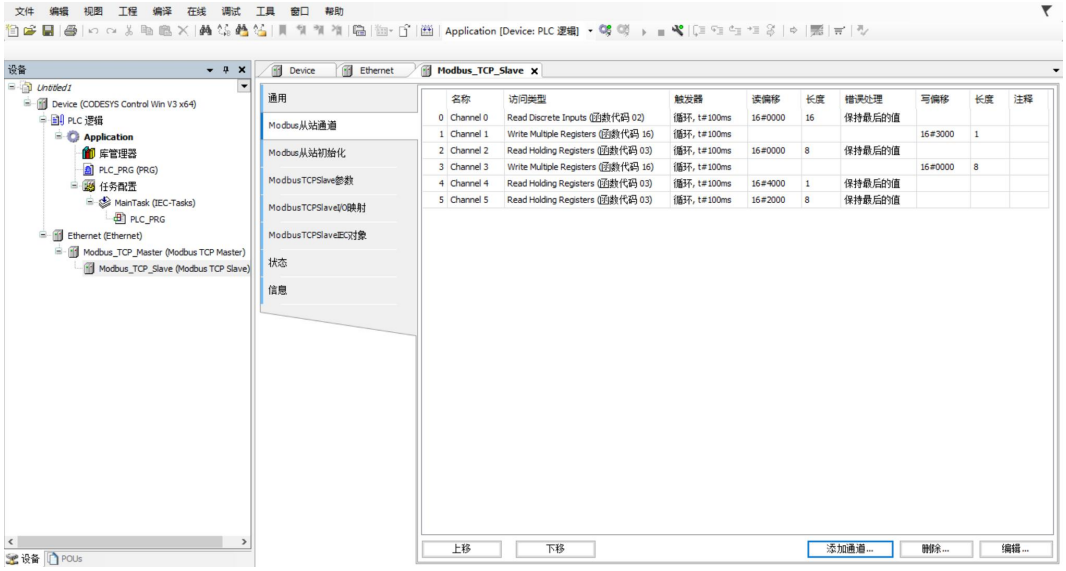

8、The slave module integrates an anomaly alarm function.

a. The host computer synchronously supports the alarm function for abnormal access of slave modules. It can read whether the accessed module is abnormal. The host computer uses function code 0x03, offset starting address 0x6000, and length 64.

On the right-hand main page of Modbus TCP Slave, click "Add Channel" to bring up the Channel 6 configuration window. In the Channel 6 configuration window, the access type (function code) is 03 Read Holding Registers, the write register offset is 0x6000, and the length is 64. After setting, click "OK", as shown in the figure below.

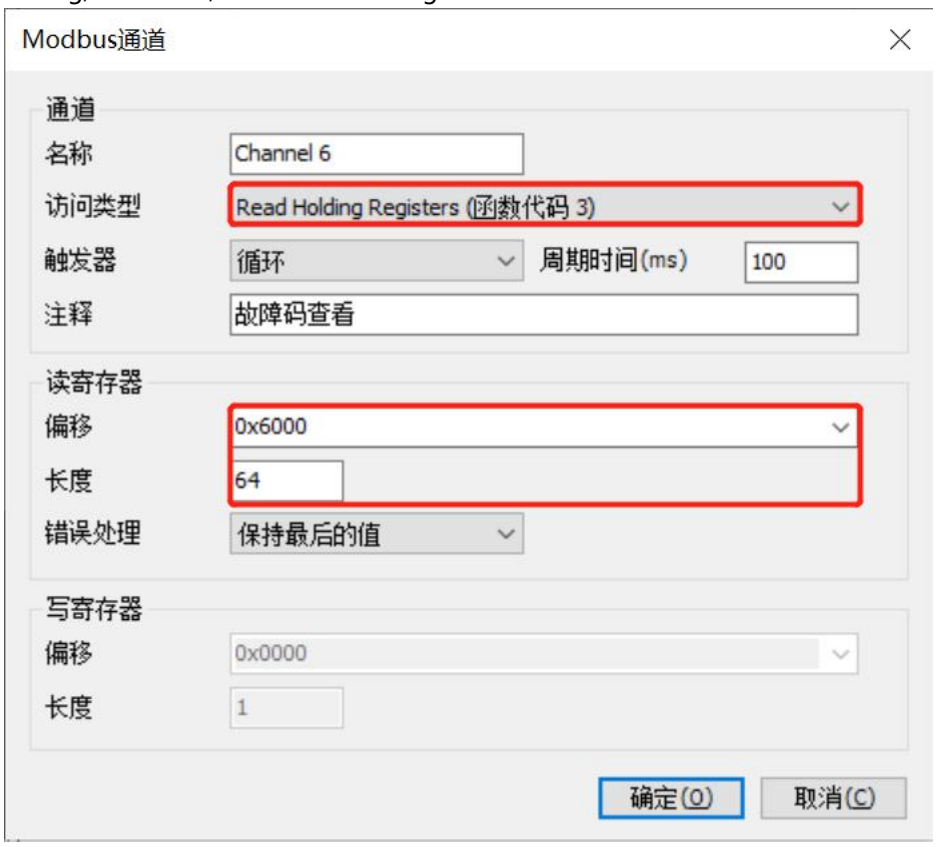

 Copyright © 2024-2025 Nanjing Solidot Electronic Technology Co., Ltd.

b. After configuration, you can view the configuration information on the Modbus slave channel main page, as shown in the figure below.

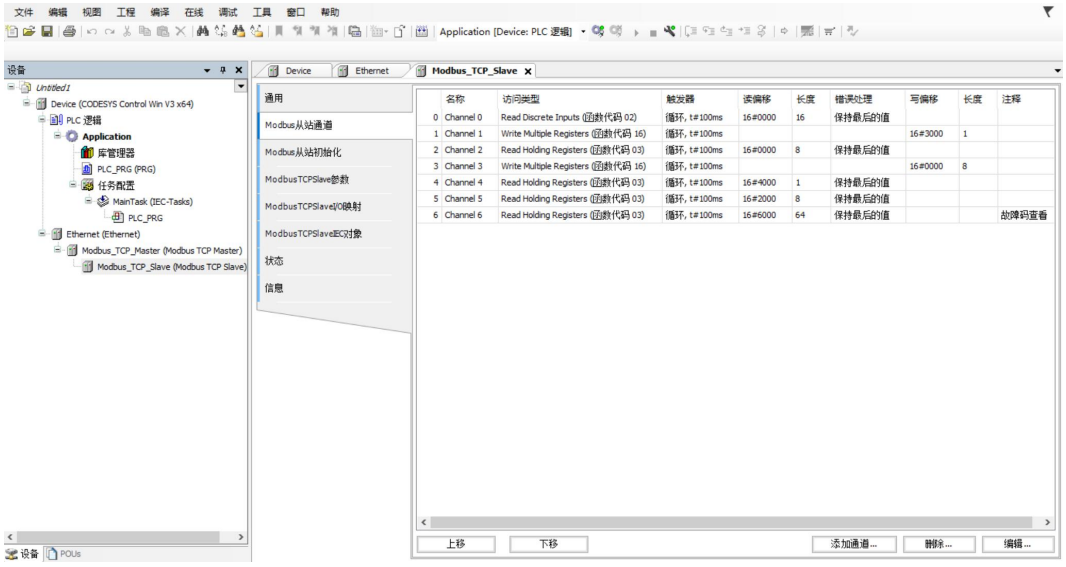

9、IO verification

a. On the right-hand main page of Modbus TCP Slave, click "ModbusTCPSlaveI/O Mapping" to monitor the IO module. The variable option in the lower right corner is constantly updating. Select "Enable 1", as shown in the figure below.

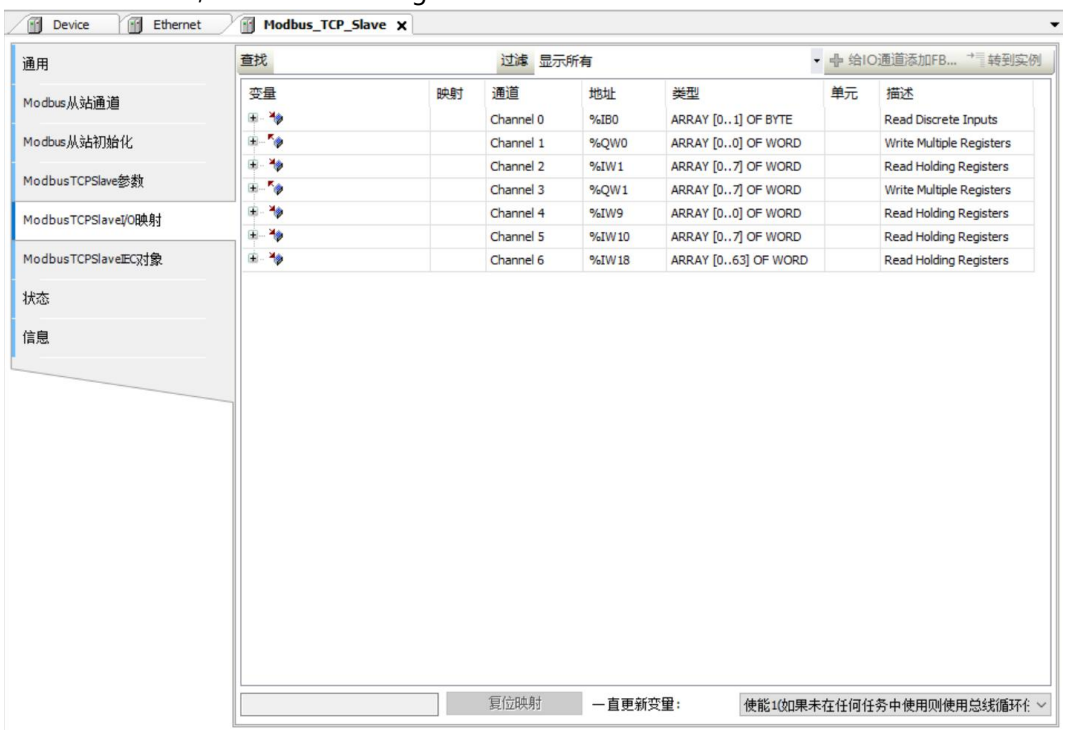

 Copyright © 2024-2025 Nanjing Solidot Electronic Technology Co., Ltd.

b. Click "Compile -> Compile" in the menu bar to compile.

c. Click "Online -> Login" in the menu bar or click the login icon to log in.

d. Click "Online -> Multiple Downloads" in the menu bar. In the Multiple Downloads window, select "Always Perform Full Download" and click "OK", as shown in the image below.

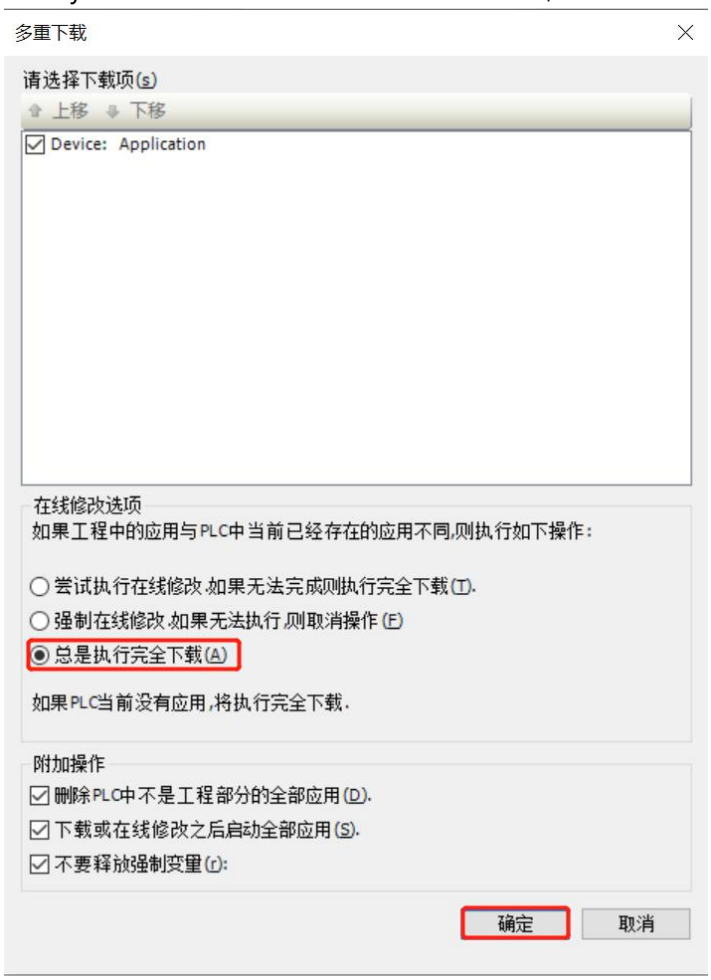

e. After logging in and downloading, you can monitor the channel values of the IO module in real time on the "ModbusTCPSlaveI/O Mapping" page, as shown in the figure below. Channel 0 is the channel monitoring page of the digital input module. Channel 0[0]~[1] corresponds to each DI channel of the XB6S-1616B module.

 Copyright © 2024-2025 Nanjing Solidot Electronic Technology Co., Ltd.

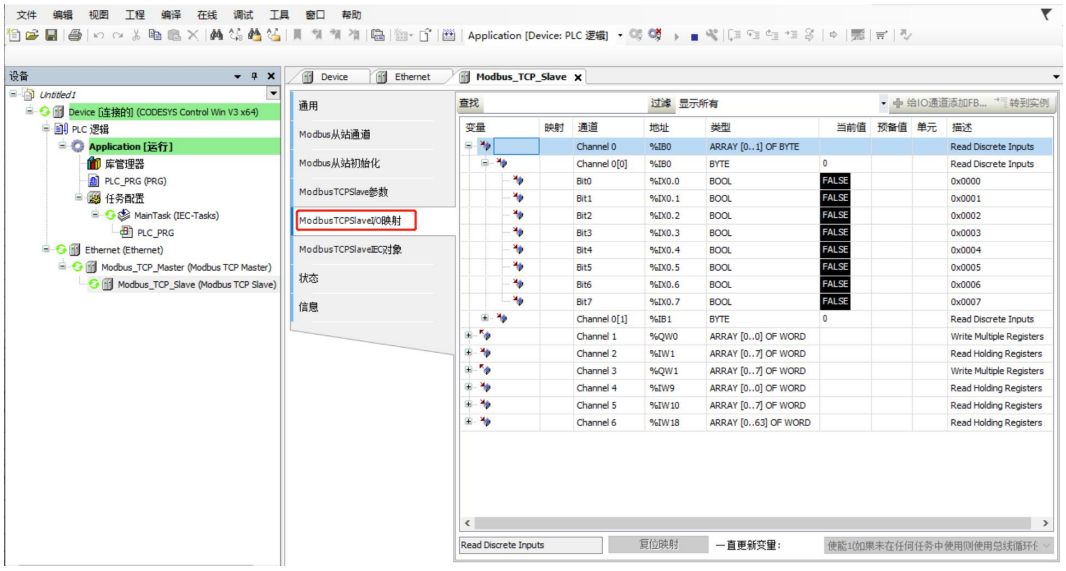

f. Channel 1 is the channel monitoring page of the digital output module. Channel 1[0] corresponds to each DO channel of the XB6S-1616B module. The written value of each channel can be forced to be output, as shown in the figure below.

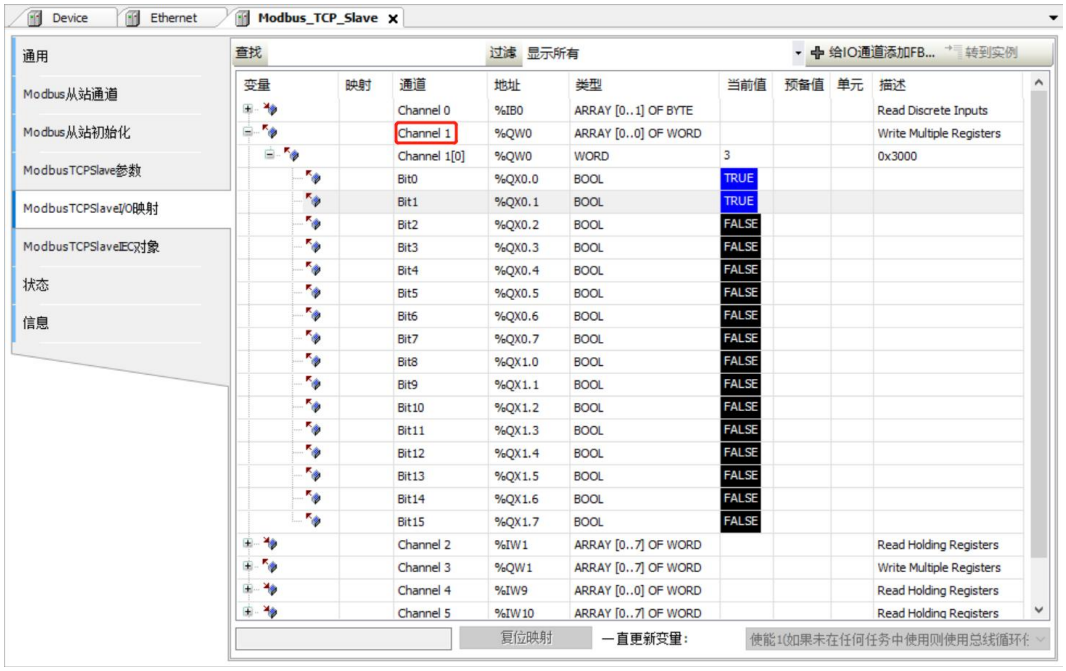

g. Channel 2 is the channel monitoring page for the analog input module. Channel 2[0]~[7] corresponds to each AI channel of the XB6S-A80VD module, as shown in the figure below.

 Copyright © 2024-2025 Nanjing Solidot Electronic Technology Co., Ltd.

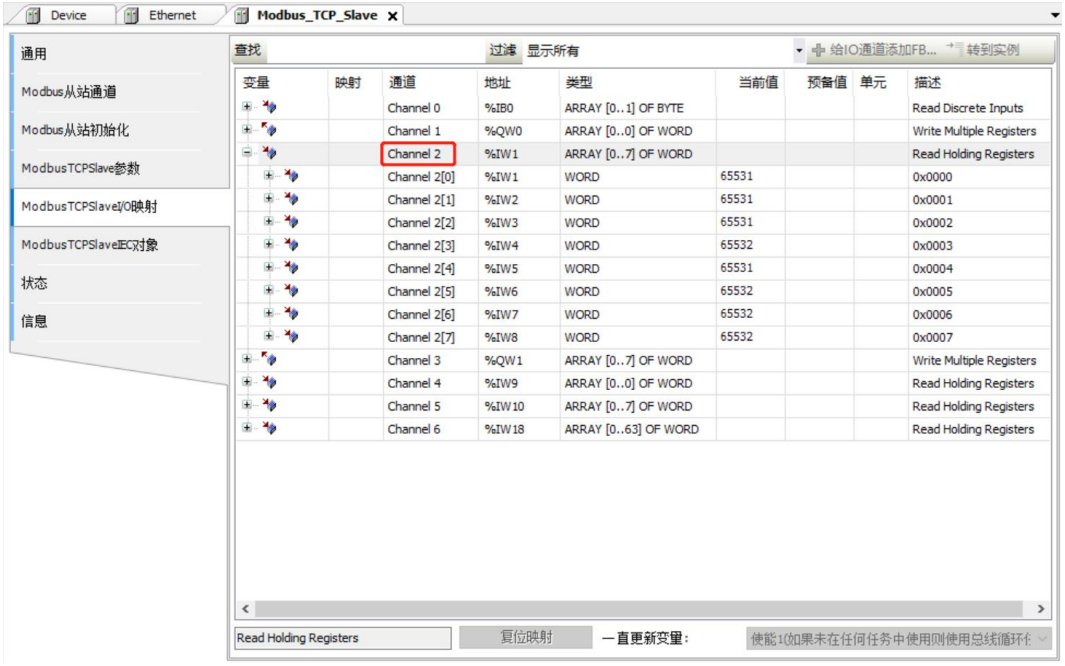

Copyright © 2024-2025 Nanjing Solidot Electronic Technology Co., Ltd.

h. Channel 3 is the channel monitoring page of the analog output module. Channel 3[0]~[7] corresponds to each AO channel of the XB6S-A08I module. The written value of each channel can be forced to be output, as shown in the figure below.

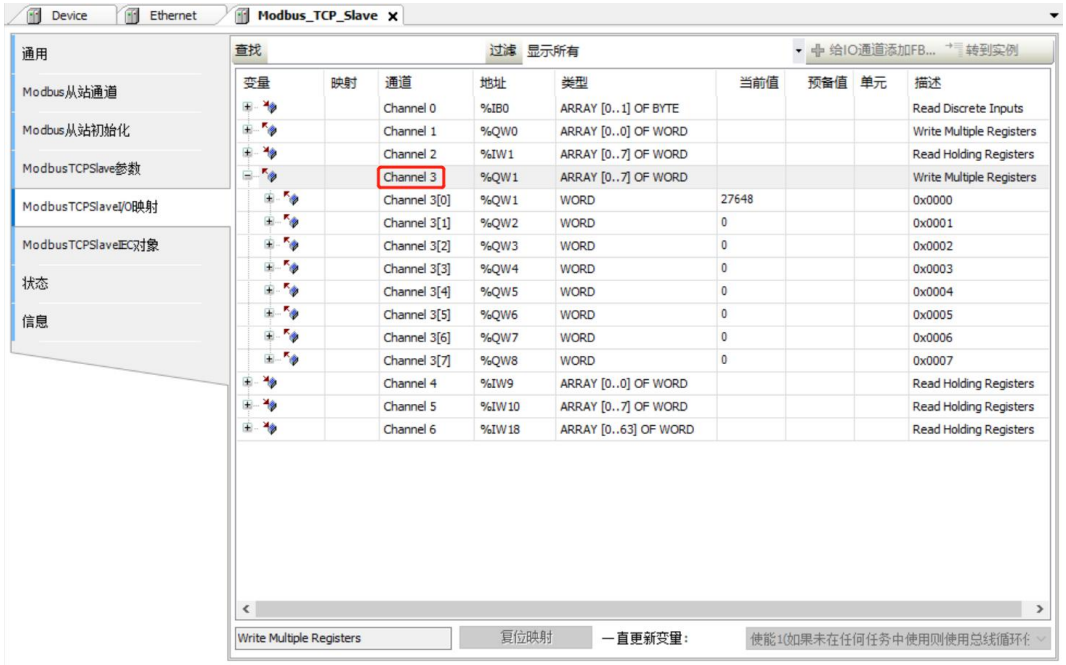

i. Channel 4 is the channel readback function monitoring page of the digital output module. Channel 4[0] corresponds to each DO channel of the XB6S-1616B module, and the written value of each channel can be read, as shown in the figure below.

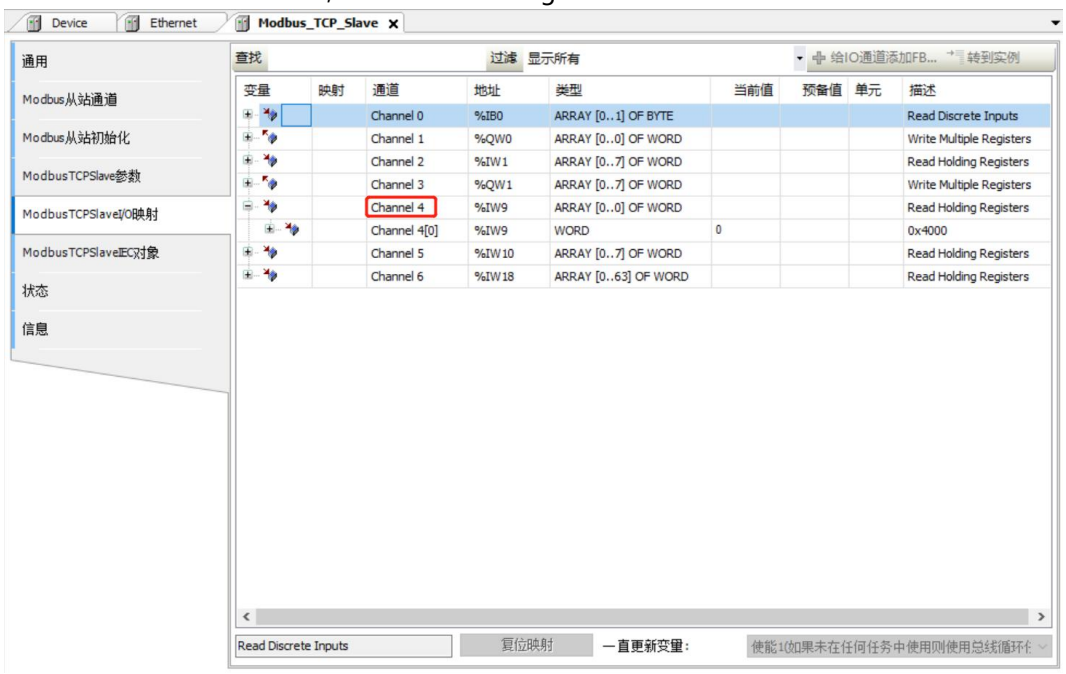

 Copyright © 2024-2025 Nanjing Solidot Electronic Technology Co., Ltd.

j. Channel 5 is the channel readback function monitoring page of the analog output module. Channel 5[0]~[7] corresponds to each AO channel of the XB6S-A08I module. The written value of each channel can be read, as shown in the figure below.

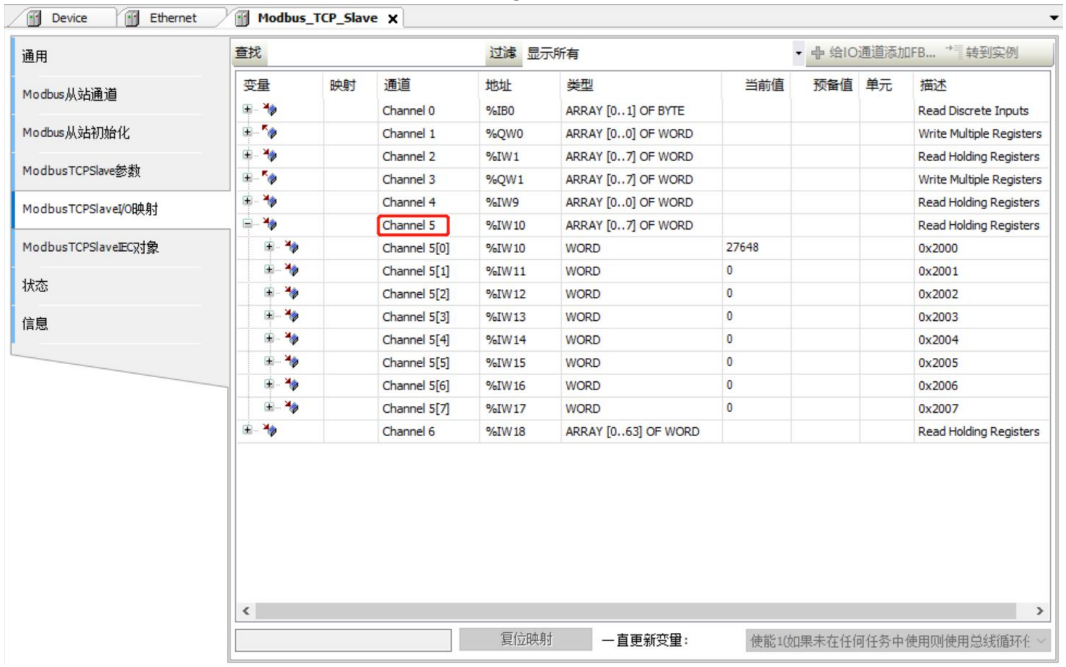

k. Channel 6 is for the slave module access anomaly alarm function. When the slave module is normal, the value is 0, as shown in the figure below.

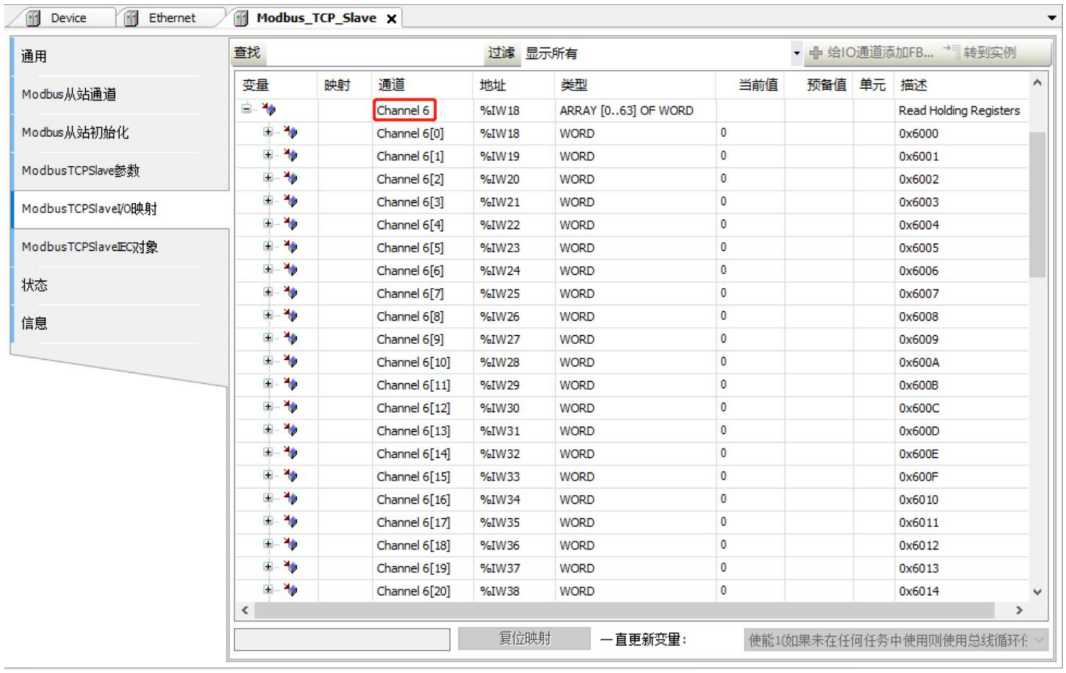

 Copyright © 2024-2025 Nanjing Solidot Electronic Technology Co., Ltd.

l. When the output signal of Channel 1 of the XB6S-A08I module exceeds the configurable range, Channel 6[4] corresponds to the alarm code of the module, and Channel 6[4] corresponds to the channel number of the abnormal alarm of the module, as shown in the figure below. The alarm code is 388, that is, Hex: 0184, which means channel overflow.

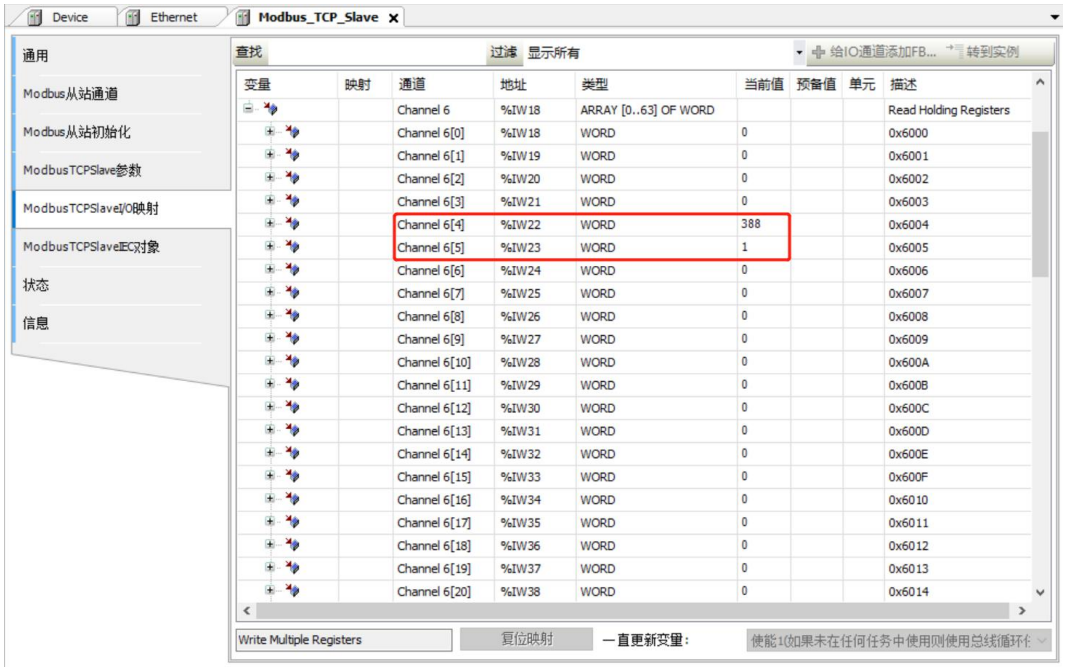

 Copyright © 2024-2025 Nanjing Solidot Electronic Technology Co., Ltd.